ADDENDUM No. 1

DATE: July 10, 2019

PROJECT: Alcona Health Center, Inc.
Oscoda Services
2019 New Clinic

OWNER: Alcona Citizen's for Health, Inc.
177 N. Barlow
PO Box 279
Lincoln, MI 48742

OWNER'S REPRESENTATIVE:
Bruce DIetz
100 N. Ripley Street
Alpena, MI 49707
(989) 350-1099
BruceDietz@hotmail.com

When submitting your Proposal for this project, please note under **ADDENDA**, that you have received Addendum No. 1.

Item #1 **ADD** Plumbing sheets P1, P2, P3, and P4, Mechanical sheets M1, M2, M3, and M4, Electrical sheets E1, E2, E3, E4, E5, and E6, have been added to the drawings available online. They are listed separately as AHC Oscoda 2019 MEP BID

End of Addendum No. 1

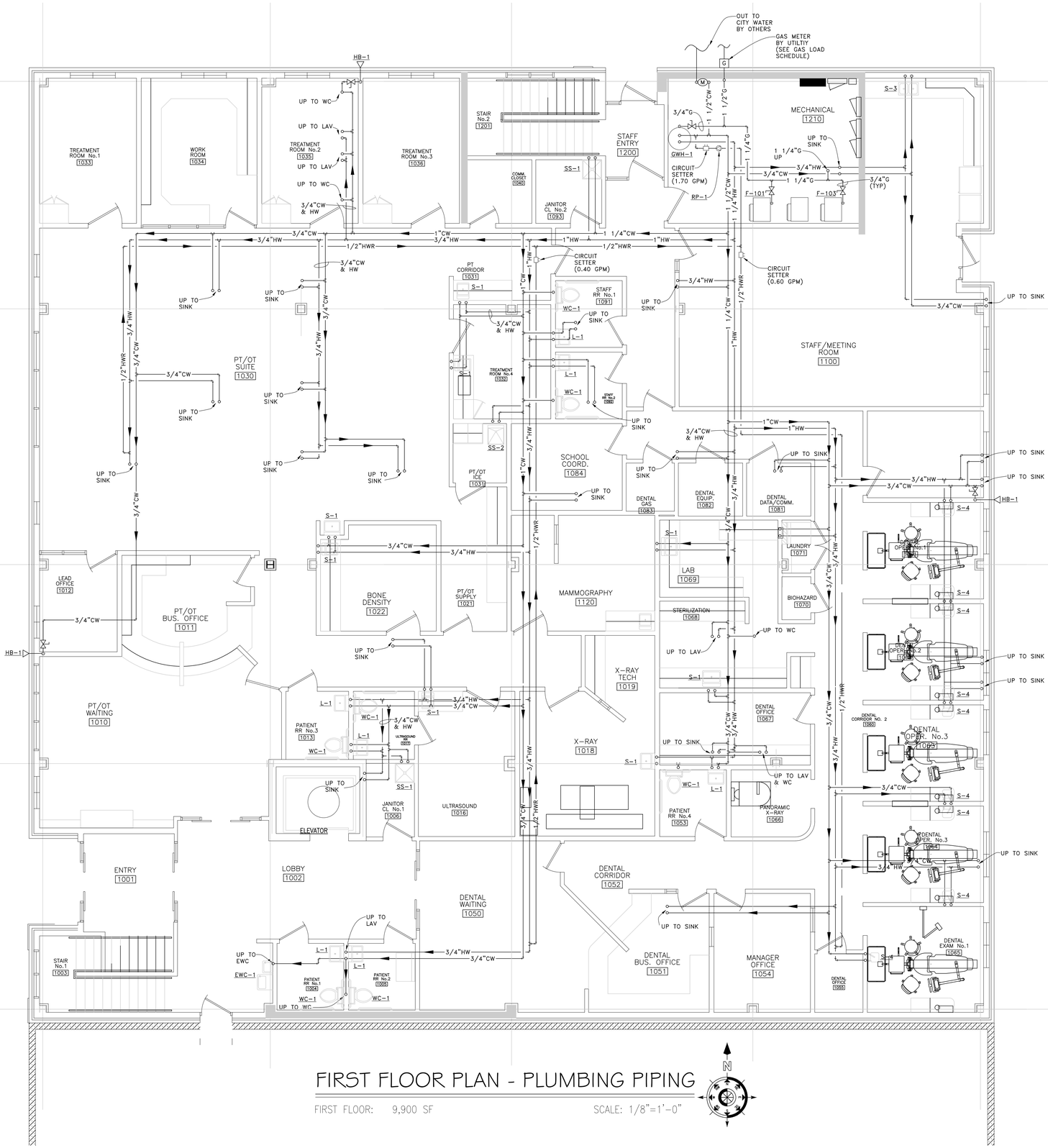

FIRST FLOOR PLAN - PLUMBING PIPING

FIRST FLOOR: 9,900 SF

SCALE: 1/8"=1'-0"

STATE OF MICHIGAN
JOHN JOSEPH RICHARDS
ENGINEER
NO. 43952
LICENSED PROFESSIONAL ENGINEER
July 09, 2019

PROJECT# 1801-02

Apollo Engineering LLC
12719 S. West Bayshore Dr.
Suite 10
Traverse City, MI 49684
(231) 930-0000 office

BRUCE DIETZ
100 N. RIPLEY
ALPENA, MI 49707

SHEET TITLE
FIRST FLOOR PLAN
-PLUMBING PIPING

PROJECT
ALCONA HEALTH CENTER
OSCODA SERVICES
NEW CLINIC

ISSUED
CODE SUB. JUNE 09, 2019

ENGINEER

DESIGNER
JEREMY ADAIR
(989) 733-5231

JOB NUMBER
1903.01

SHEET NO.
P1

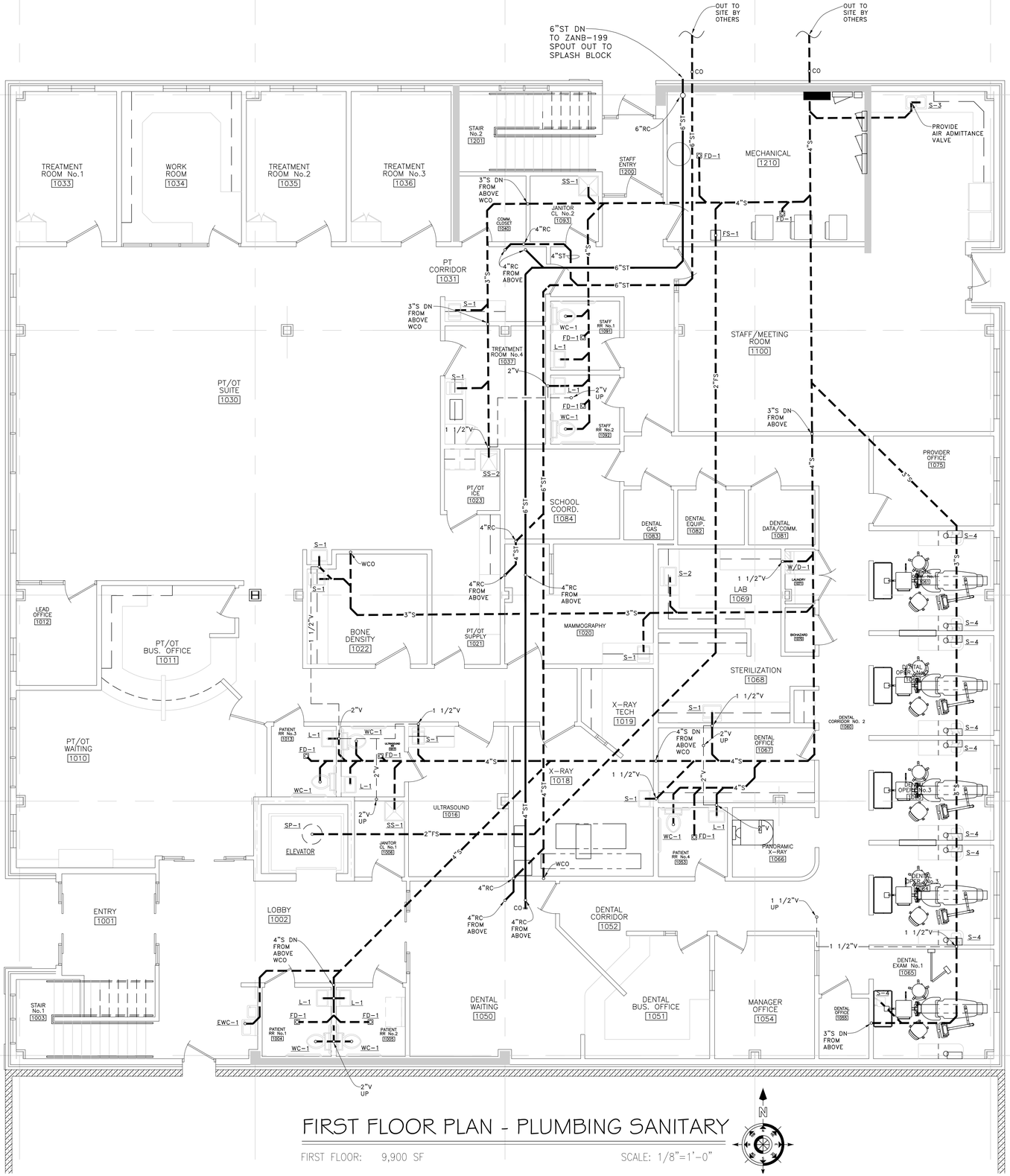

FIRST FLOOR PLAN - PLUMBING SANITARY

FIRST FLOOR: 9,900 SF

SCALE: 1/8"=1'-0"

BRUCE DIETZ
100 N. RIPLEY
ALPENA, MI 49707

SHEET TITLE
FIRST FLOOR PLAN - PLUMBING SANITARY

PROJECT
ALCONA HEALTH CENTER
OSCODA SERVICES
NEW CLINIC

ISSUED
CODE SUB. JUNE 09, 2019

PROJECT# 1801-02
12719 S. West Bayshore Dr.
Suite 10
Traverse City, MI 49684
(231) 930-0800 office

STATE OF MICHIGAN
JOHN JOSEPH RICHARDS
ENGINEER
NO. 43952
LICENSED PROFESSIONAL ENGINEER
June 09, 2019

Apollo Engineering LLC

ENGINEER

DESIGNER
JEREMY ADAIR
(989) 733-5231

JOB NUMBER
1903.01

SHEET NO.
P2

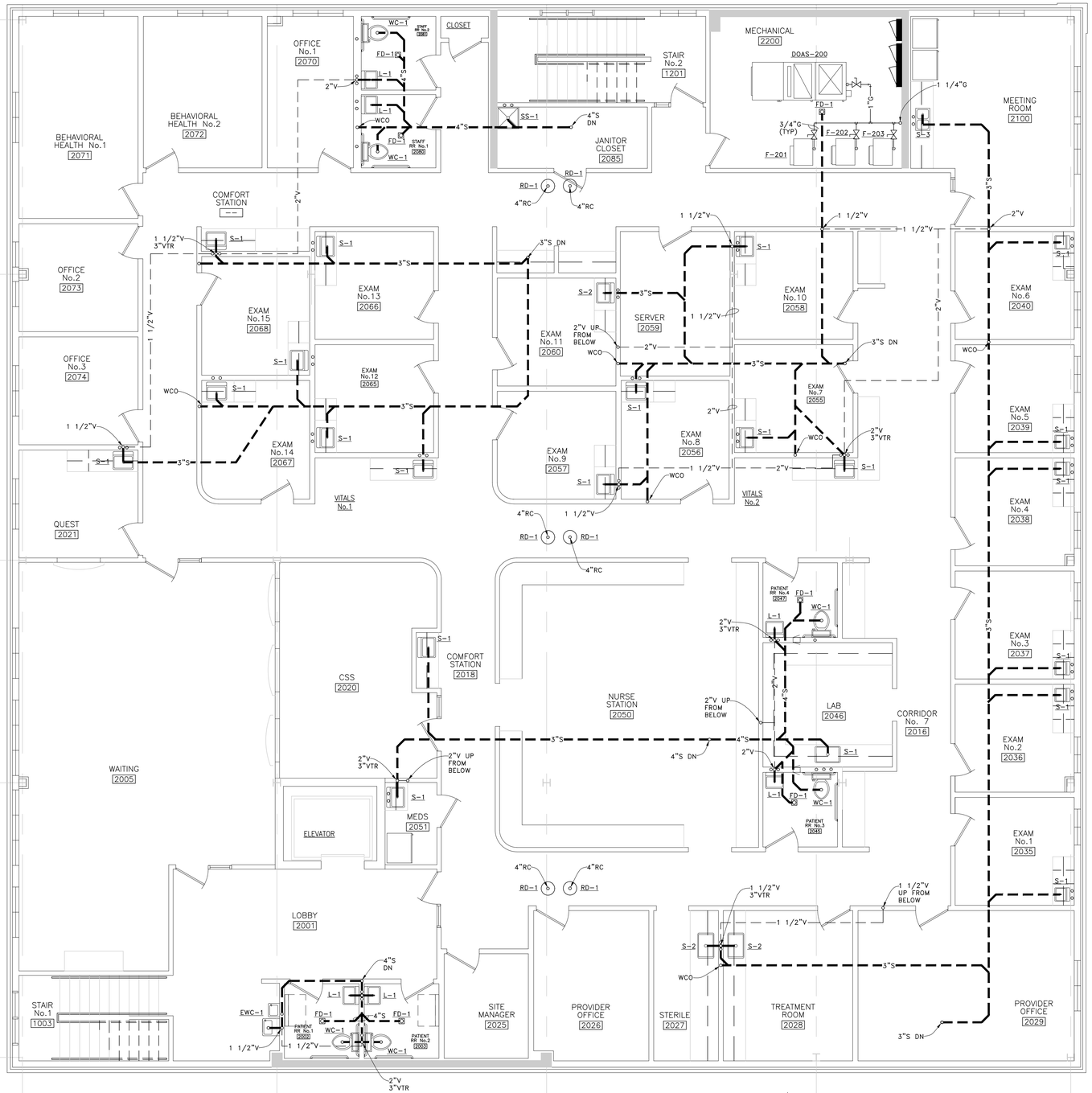

SECOND FLOOR PLAN - PLUMBING

FIRST FLOOR: 9,900 SF

SCALE: 1/8"=1'-0"

N

BRUCE DIETZ
100 N. RIPLEY
ALPENA, MI 49707

SHEET TITLE
SECOND FLOOR PLAN - PLUMBING

PROJECT
ALCONA HEALTH CENTER
OSCODA SERVICES
NEW CLINIC

ISSUED
CODE SUB. JUNE 09, 2019

PROJECT# 1801-02

12719 S. West Bayshore Dr.
Suite 10
Traverse City, MI 49684
(231) 930-0800 office

Apollo Engineering LLC

STATE OF MICHIGAN
JOHN JOSEPH RICHARDS
ENGINEER
NO. 43952
LICENSED PROFESSIONAL ENGINEER

ENGINEER

DESIGNER
JEREMY ADAIR
(989) 733-5231

JOB NUMBER
1903.01

SHEET NO.
P3

PLUMBING NOTES

GENERAL NOTES

1. ALL CONSTRUCTION AND MATERIALS SHALL CONFORM TO ALL APPLICABLE FEDERAL, STATE AND LOCAL CODES AND REGULATIONS.

2. EACH CONTRACTOR SHALL BE THOROUGHLY KNOWLEDGEABLE OF REGULATIONS GOVERNING HIS PRODUCT AND SERVICE AND SHALL ASSUME RESPONSIBILITY OF INSTALLATION IN ACCORDANCE WITH THOSE REGULATIONS.

3. CONTRACTORS TO VERIFY ALL DIMENSIONS RELATIVE TO THEIR SPECIFIC WORK AND SHALL BE THOROUGHLY FAMILIAR WITH EXISTING CONDITIONS PRIOR TO INITIATING THEIR WORK. DISCREPANCIES SHALL BE REPORTED TO THE GENERAL CONTRACTOR OR TO HIS ON-SITE REPRESENTATIVE.

4. FAILURE TO DETECT INFERIOR WORK, OR WORK NOT IN ACCORDANCE WITH THESE CONSTRUCTION DOCUMENTS, SHALL NOT BE CONSTRUED AS ACCEPTABLE OF SUCH WORK.

5. ANY PENETRATIONS THROUGH FIRE-RATED ASSEMBLIES FOR MECHANICAL OR PLUMBING SYSTEMS, ETC. SHALL BE FIRE-STOPPED AND DRAFT-STOPPED WITH NON-COMBUSTIBLE MATERIALS PER CODE REQUIREMENTS TO MAINTAIN STRUCTURAL AND FIRE RESISTIVE INTEGRITY.

6. DRAWINGS ARE DIAGRAMMATIC ONLY, FIELD VERIFY EXISTING CONDITIONS.

7. PRIOR TO SUBMITTING A PROPOSAL, BIDDER SHALL HAVE VISITED THE CONSTRUCTION SITE. HE SHALL BE FAMILIAR WITH THE EXISTING CONDITIONS UNDER WHICH HE WILL HAVE TO OPERATE AND WHICH WILL IN ANY WAY AFFECT THE WORK UNDER THIS CONTRACT. NO SUBSEQUENT ALLOWANCE WILL BE MADE IN THIS CONNECTION ON BEHALF OF THE CONTRACTOR FOR ANY ERROR OF NEGLIGENCE ON HIS PART.

8. PLUMBING CONTRACTOR SHALL OBTAIN ALL PERMITS, PAY ALL FEES, INCLUDING COSTS ASSESSED BY THE MECHANICAL UTILITY COMPANIES, AND ARRANGE FOR ALL INSPECTIONS FOR HIS WORK. AT THE COMPLETION OF PLUMBING WORK, THE PLUMBING CONTRACTOR SHALL FURNISH THE OWNER WITH ALL CERTIFICATES OF FINAL INSPECTION AND APPROVALS.

9. PLUMBING CONTRACTOR SHALL GUARANTEE ALL WORK INSTALLED UNDER HIS CONTRACT TO BE FREE FROM DEFECTIVE WORKMANSHIP AND MATERIALS FOR A PERIOD OF ONE YEAR AFTER THE ACCEPTANCE OF THE BUILDING BY THE OWNER. SHOULD DEFECTS OCCUR WITHIN THIS PERIOD, REPAIR AND/OR REPLACE DEFECTIVE ITEMS AT NO EXPENSE TO THE OWNER.

10. PLUMBING CONTRACTOR SHALL COORDINATE LOCATIONS OF HIS EQUIPMENT AND WORK WITH OTHER BUILDING TRADES TO AVOID ANY INTERFERENCE'S BETWEEN HIS WORK AND OTHER BUILDING TRADES. IF ANY DISCREPANCIES OCCUR, CONSULT WITH THE GENERAL CONTRACTOR OR HIS ON-SITE REPRESENTATIVE.

11. THE CONTRACTOR SHALL BE HELD FULLY RESPONSIBLE FOR THE PROPER RESTORATION OF ALL EXISTING SURFACES REQUIRING PATCHING, PLASTERING, PAINTING AND/OR OTHER REPAIR DUE TO THE INSTALLATION OF MECHANICAL WORK UNDER THE TERMS OF THIS SPECIFICATION. CLOSE ALL OPENINGS, REPAIR ALL SURFACES, ETC. AS REQUIRED.

12. THE CONTRACTOR SHALL EMPLOY QUALIFIED AND EXPERIENCED WORKMEN FOR THIS WORK.

13. THE PLUMBING CONTRACTOR SHALL PERIODICALLY REMOVE FROM THE SITE ALL DEBRIS AND RUBBISH ACCUMULATING AS A RESULT OF THE MECHANICAL INSTALLATION. UPON COMPLETION OF THE PROJECT, HE SHALL DISPOSE OF ALL DEBRIS AND RUBBISH AND SHALL LEAVE ALL AREAS CLEAN.

PLUMBING CONSTRUCTION NOTES

GENERAL

1. REFERENCE ARCHITECTURAL DRAWINGS FOR ALL ROUGH-IN DIMENSIONS, BOTH FIXTURES AND WALLS.

2. ALL VALVES SHALL BE ACCESSIBLE.

3. WATER HAMMER ARRESTORS SHALL BE INSTALLED AND SHALL BE ACCESSIBLE.

4. PLUMBING CONTRACTOR TO EXTEND WATER AND SANITARY LINES AND MAKE UTILITY CONNECTIONS.

SPECIFICATIONS

1. PLUMBING DESIGN PER 2015 MICHIGAN PLUMBING CODES.

PLUMBING LEGEND

S	SANITARY SEWER
FS	FORCED SANITARY
V	SANITARY VENT
CW	COLD WATER LINE
HW	HOT WATER LINE
HWR	HOT WATER RETURN
G	GAS LINE
BG	BALL VALVE

GAS LOAD SCHEDULE

MARK	EQUIPMENT	GAS LOAD
F-101	FURNACE	60,600 BTU/HR
F-103	FURNACE	60,600 BTU/HR
F-201	FURNACE	60,600 BTU/HR
F-202	FURNACE	60,600 BTU/HR
F-203	FURNACE	60,600 BTU/HR
DOAS-200	DEDICATED OUTSIDE AIR	160,000 BTU/HR
GWH-1	GAS WATER HEATER	100,000 BTU/HR
TOTAL GAS LOAD		538,200 BTU/HR

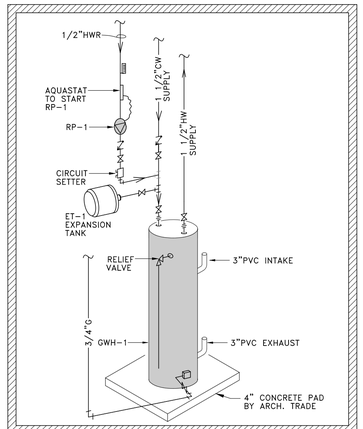

GAS WATER HEATER DETAIL

NOT TO SCALE

PLUMBING FIXTURE SCHEDULE

MARK	FIXTURE	MANU.	MODEL	SAN.	HOT	COLD	REMARKS
WC-1	WATER CLOSET	AM. STD.	2467.100	3"	–	1"	W/ OLSONITE #95 SEATE, 17" HIGH
L-1	LAVITORY	AM. STD.	0355.027	1 1/2"	1/2"	1/2"	W/ DELTA FAUCET #501
S-1	SINK	ELKAY	BLR-150C	1 1/2"	1/2"	1/2"	COMBINATION INCLUDES FAUCET
S-2	SINK	ELKAY	LRAD221955	1 1/2"	1/2"	1/2"	W/ T & S BRASS #B-0892-01 FAUCET
S-3	SINK	ELKAY	LR2519	1 1/2"	1/2"	1/2"	W/ ELKAY #LK100CR FAUCET
S-4	SINK	BY OTHERS	–	1 1/2"	1/2"	1/2"	BY DENTAL EQUIPMENT SUPPLIER
EWC-1	ELECTRIC WATER COOLER	ELKAY	EZSTLGBSC	1 1/2"	–	1/2"	–
GWH-1	GAS WATER HEATER	AO SMITH	BTXL-100	–	–	1/2"	75 GAL., 100,000 BTU/HR
SP-1	SUMP PUMP	XYLEM	2EC	2"F	–	–	208V, 3ø, 3.1HP, W/ (1) S40B4872 BASIN & (1) S310160 CONTROLLER WITH FLOATS
FS-1	FLOOR SINK	ZURN	Z-1900-2	3"S	–	–	SEE NOTE #6
FD-1	FLOOR DRAIN	ZURN	ZN-415-5B	3"S	–	–	W/ TYPE 'B' ROUND STRAINER, SEE NOTE #6
SS-1	SERVICE SINK	FLORESTONE	MSR2424	1 1/2"	1/2"	1/2"	W/MR-370, MR-371, & MR-372
SS-2	SERVICE SINK	FLORESTONE	FM	1 1/2"	1/2"	1/2"	W/MR-370, & MR-371
W/D-1	WASHER	BY OWNER	–	1 1/2"	1/2"	1/2"	–
RD-1	ROOF DRAIN	ZC-100-C	–	6"ST	–	–	–

NOTES:

1. SEE ARCHITECTURAL DRAWINGS FOR ALL ROUGH-IN LOCATIONS OF PLUMBING FIXTURES.
2. WC-1 TO CONFORM TO ADA REQUIREMENTS.
3. VERIFY COLOR WITH ARCHITECT BEFORE ORDERING.
4. INSULATE ALL EXPOSED SANITARY AND DOMESTIC HOT AND COLD WATER PIPING TO LAVATORIES.
5. PROVIDE A POWERS 480 MIXING VALVE AT EACH LAV.
6. PROVIDE A SURE SEAL MODEL #SS2009 TRAP SEAL AT EACH FLOOR DRAIN

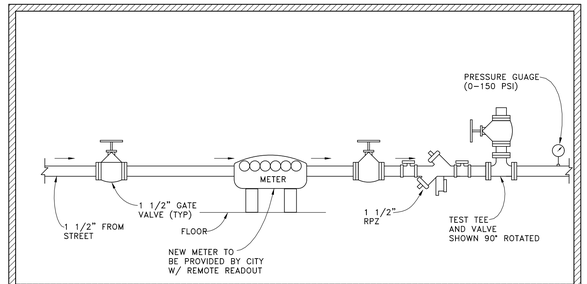

WATER METER DETAIL

NOT TO SCALE

BRUCE DIETZ
100 N. RIPLEY
ALPENA, MI 49707

SHEET TITLE
SCHEDULES / NOTES / DETAILS
- PLUMBING

PROJECT
ALCONA HEALTH CENTER
OSCODA SERVICES
NEW CLINIC

ISSUED
CODE SUB. JUNE 09, 2019

ENGINEER

DESIGNER
JEREMY ADAIR
(989) 733-5231

JOB NUMBER
1903.01

SHEET NO.
P4

STATE OF MICHIGAN
REGISTERED PROFESSIONAL ENGINEER
JOHN JOSEPH RICHARDS
ENGINEER
No. 43952

PROJECT # 1801-02

Apollo Engineering LLC
137 N. West Bayshore Dr.
Suite 110
Traverse City, MI 49684
(231) 922-0300 office

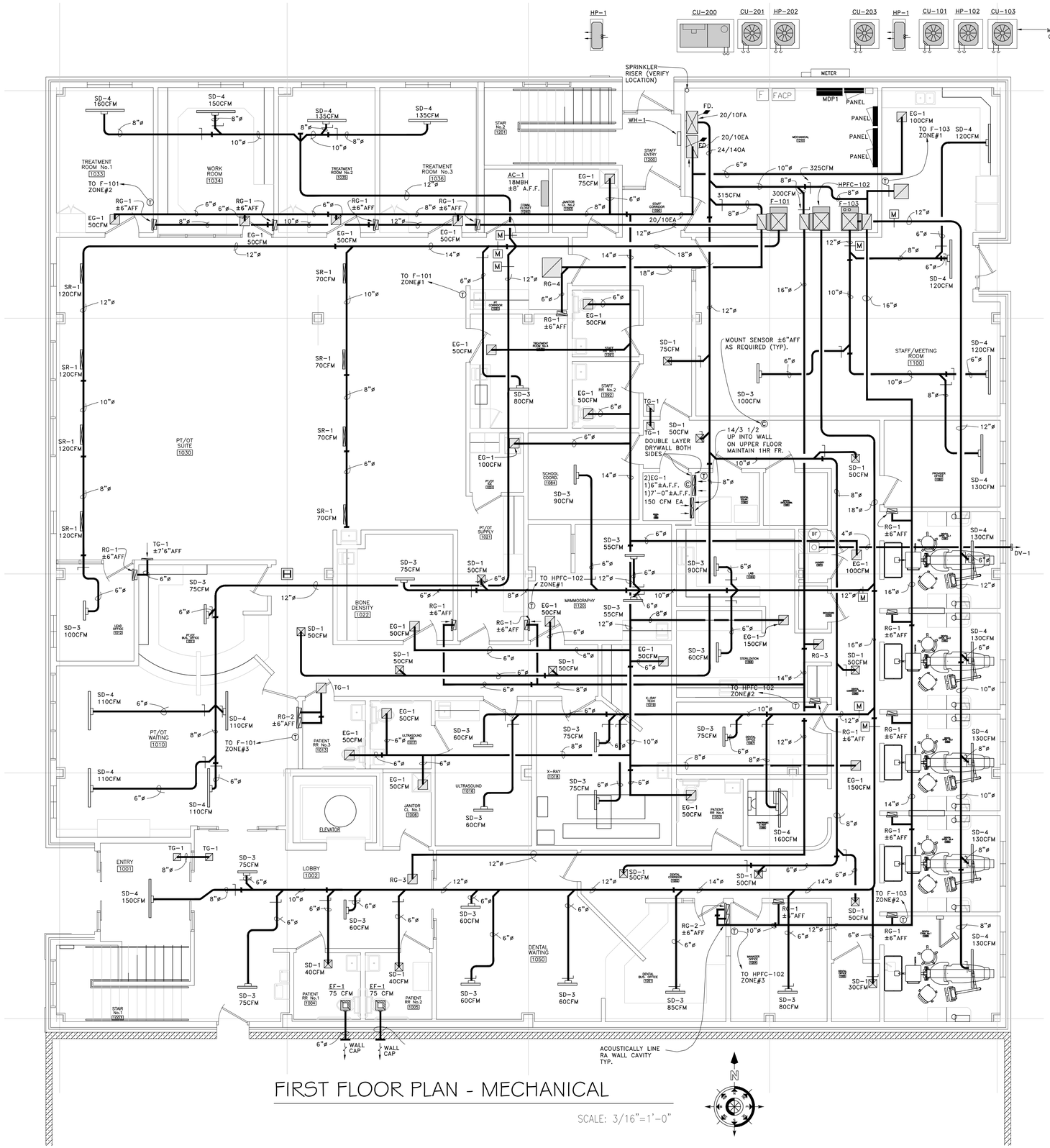

FIRST FLOOR PLAN - MECHANICAL

SCALE: 3/16"=1'-0"

GENERAL NOTES

1. ALL CONSTRUCTION AND MATERIALS SHALL CONFORM TO ALL APPLICABLE FEDERAL, STATE, AND LOCAL CODES AND REGULATIONS.

2. PROJECT TO COMPLY WITH CURRENT AMERICANS WITH DISABILITIES ACT (ADA) REQUIREMENTS.

3. EACH CONTRACTOR SHALL BE THOROUGHLY KNOWLEDGEABLE OF REGULATIONS GOVERNING HIS PRODUCT AND SERVICE AND SHALL ASSUME RESPONSIBILITY OF INSTALLATION IN ACCORDANCE WITH THOSE REGULATIONS.

4. CONTRACTORS TO VERIFY ALL DIMENSIONS RELATIVE TO THEIR SPECIFIC WORK AND SHALL BE THOROUGHLY FAMILIAR WITH EXISTING CONDITIONS PRIOR TO INITIATING THEIR WORK. DISCREPANCIES SHALL BE REPORTED TO THE GENERAL CONTRACTOR OR TO HIS ON-SITE REPRESENTATIVE.

5. ANY PENETRATIONS THROUGH FIRE-RATED ASSEMBLIES FOR MECHANICAL OR PLUMBING SYSTEMS, ETC. SHALL BE FIRE-STOPPED AND DRAFT-STOPPED WITH NON-COMBUSTABLE MATERIALS PER CODE REQUIREMENTS TO MAINTAIN STRUCTURAL AND FIRE RESISTIVE INTEGRITY.

6. DRAWINGS ARE DIAGRAMMATIC ONLY, FIELD VERIFY EXISTING CONDITIONS.

7. PRIOR TO SUBMITTING A PROPOSAL, BIDDER SHALL HAVE VISITED THE CONSTRUCTION SITE. HE SHALL BE FAMILIAR WITH THE EXISTING CONDITIONS UNDER WHICH HE WILL HAVE TO OPERATE AND WHICH WILL IN ANY WAY AFFECT THE WORK UNDER THIS CONTRACT. NO SUBSEQUENT ALLOWANCE WILL BE MAKE IN THIS CONNECTION ON BEHALF OF THE CONTRACTOR FOR ANY ERROR OF NEGLIGENCE ON HIS PART.

8. MECHANICAL CONTRACTOR SHALL OBTAIN ALL PERMITS PAY ALL FEES, INCLUDING COSTS ASSESSED BY THE MECHANICAL UTILITIES COMPANIES, AND ARRANGE FOR ALL INSPECTIONS FOR HIS WORK. AT THE COMPLETION OF MECHANICAL WORK, THE MECHANICAL CONTRACTOR SHALL FURNISH THE OWNER WITH ALL CERTIFICATES OF FINAL INSPECTION AND APPROVALS.

9. MECHANICAL CONTRACTOR SHALL COORDINATE LOCATIONS OF HIS EQUIPMENT AND WORK WITH OTHER BUILDING TRADES TO AVOID ANY INTERFERENCES BETWEEN HIS WORK AND THE WORK OF OTHER BUILDING TRADES. IF ANDY DISCREPANCIES OCCUR, CONSULT WITH THE GENERAL CONTRACTOR BEFORE CONTINUING.

10. THE CONTRACTOR SHALL EMPLOY QUALIFIED AND EXPERIENCED WORKMEN FOR THIS WORK.

11. THE MECHANICAL CONTRACTOR SHALL PERIODICALLY REMOVE FROM THE SITE ALL DEBRIS AND RUBBISH ACCUMULATING AS A RESULT OF THE MECHANICAL INSTALLATION. UPON COMPLETION OF THE PROJECT, HE SHALL LEAVE ALL AREAS CLEAN.

MECHANICAL CONSTRUCTION NOTES

GENERAL

1. THE CONTRACTOR SHALL CAREFULLY COORDINATE LOCATIONS OF DUCTS, REGISTERS, DIFFUSERS, AND GRILLES WITH STRUCTURAL FRAMING, ARCH TRADES, ELECTRICAL TRADES AND PLUMBING TRADES.

2. CONTRACTOR SHALL AIR BALANCING EQUIPMENT.

3. CUTTING AND/OR PATCHING THAT MAY BE REQUIRED FOR THE INSTALLATION OF THE MECHANICAL SYSTEM(S) SHALL BE DONE AND/OR REPAIRED BY THE MECHANICAL CONTRACTOR. NO CUTTING OF THE BUILDING STRUCTURAL SYSTEM SHALL BE DONE WITHOUT THE WRITTEN CONSENT OF THE ARCHITECT.

4. CONTRACTOR SHALL FIELD VERIFY ALL EXISTING CONDITIONS AND SHALL WORK WITH EXISTING SYSTEMS IN AN "AS FOUND" CONDITION.

SPECIFICATIONS

1. MECHANICAL DESIGN PER THE LATEST MICHIGAN MECHANICAL CODE.
2. VENTILATION REQUIREMENTS ARE MET BY MECHANICAL VENTILATION.
3. THE SYSTEM DESIGN HAS BE DEVELOPED TO MEET THE CURRENT ENERGY CODE.

DUCTWORK

1. SUSPEND ALL DUCTS SECURELY FROM ADJACENT BUILDING MEMBERS. DO NOT SUPPORT DUCTS FROM UNIT DUCT CONNECTORS. DUCT CONNECTIONS SHALL BE MADE IN ACCORDANCE WITH THE MANUFACTURER'S RECOMMENDATIONS AND SHALL INCLUDE FLEXIBLE DUCT CONNECTORS.

2. INCLUDE FIRE DAMPERS AT ALL WALL, CEILING OR FLOOR PENETRATIONS AS REQUIRED BY CODE. (SEE ARCH. DRAWINGS FOR FIRE RATED ASSEMBLIES.)

3. RETURN AIR DUCTWORK SHALL BE CONSTRUCTED AS PER SMACNA STANDARDS (LOW PRESSURE) GAUGE GALVANIZED STEEL DUCTWORK.

4. SUPPLY AIR DUCTWORK SHALL BE CONSTRUCTED AS PER SMACNA STANDARDS(LOW PRESSURE) GAUGE GALVANIZED STEEL, WITH MINIMUM 1-1/2" INSULATION EQUAL TO OWENS CORNING ALL SERVICE DUCT WRAP TYPE 150 WITH FRK VAPOR BARRIER FACING. NO INSULATION SHALL BE ON EXPOSED SA DUCTING. INSULATED FLEXIBLE DUCT MAY BE USED FOR SHORT AIR DUCT RUNS IN UNEXPOSED AREAS ONLY.

5. EXHAUST AIR DUCTWORK SHALL BE CONSTRUCTED AS PER SMACNA STANDARDS(LOW PRESSURE) GAUGE GALVANIZED STEEL. INSULATION SHALL ONLY BE REQUIRED WHEN 10FT OR LESS FROM OUTSIDE TERMINATION. INSULATION WITH A MINIMUM 1-1/2" INSULATION EQUAL TO OWENS CORNING ALL SERVICE DUCT WRAP TYPE 150 WITH FRK VAPOR BARRIER FACING SHALL BE REQUIRED. THIS IS REQUIRED TO ELIMINATE DUCT SWEATING DURING COLD WEATHER.

6. ACOUSTICAL DUCT LINER TO BE INSTALLED ON SUPPLY AIR AND RETURN AIR DUCTING (PLENUMS) NEAR HVAC UNITS EQUAL TO OWENS CORNING AEROFLEX DUCT LINER TYPE 150 WITH A MAXIMUM THERMAL CONDUCTIVITY OF .28 @ 75 F. DUCTWORK DIMENSIONS INDICATED ARE INSIDE DIMENSIONS REQUIRED FOR AIR FLOW. NO EXTERNAL INSUL. REQ'D.

7. INCLUDE MANUAL BALANCING DAMPERS AS REQUIRED TO BALANCE THE AIR SYSTEM.

HEATING AND COOLING EQUIPMENT

1. ALL EQUIPMENT SHALL BE INSTALLED TO MANUFACTURER'S INSTALLATION INSTRUCTIONS.
2. ALL EQUIPMENT SHALL BE INSTALLED ACCORDING TO APPLICABLE STATE AND LOCAL CODES.
3. BALANCE EXHAUST IN BATHS TO PRODUCE A SLIGHT NEGATIVE PRESSURE IN THE ROOMS. CFMS AS STATED ARE NOMINAL EXHAUST TO BE NO LESS THEN STATED.

OPERATION

1. DURING OCCUPIED TIME THE FURNACE FAN SHALL RUN CONTINUOUSLY. THE AIR FLOW FOR THE FURNACE SHALL BE AS SCHEDULED. INFINITY T-STAT SHALL CONTROL HEAT/COOL MODE.
2. ENERGY RECOVERY UNIT SHALL PROVIDE ALL VENTILATION REQUIREMENTS FOR AREA TO WHICH IT SERVES.
3. ERVS SHALL BE CONTROLLED BY DIGITAL TIME CLOCK.

MECHANICAL LEGEND

F	FURNACE
CU	CONDENSING UNIT
DOAS	DEDICATED OUTSIDE AIR UNIT
S.A.	SUPPLY AIR
R.A.	RETURN AIR
O.A.	OUTDOOR AIR
E.A.	EXHAUST AIR
T	TEMPERATURE THERMOSTAT INFINITY
	BALANCE DAMPER W/LOCKING QUADRANT
M	MOTORIZED DAMPER
AC	HP TERMINAL UNIT
HPFC	HEAT PUMP FAN COIL
HP	AIR/AIR HP

STATE OF MICHIGAN
JOHN JOSEPH RICHARDS
ENGINEER
NO. 43952
5/3/2019

PROJECT 1903.01
Apollo Engineering LLC
1775 S. West Bayshore Dr.
Suite 210
Traverse City, MI 49685
(231) 935-3400 Office

BRUCE DIETZ
100 N. RIPLEY
ALPENA, MI 49707

SHEET TITLE: FIRST FLOOR PLAN - MECHANICAL

PROJECT: ALCONA HEALTH CENTER
OSCODA SERVICES
NEW CLINIC

ISSUED
CODE SUB. JULY 9, 2019

ENGINEER

DESIGNER: JEREMY ADAIR (989) 733-5231

JOB NUMBER: 1903.01

SHEET NO.: M1

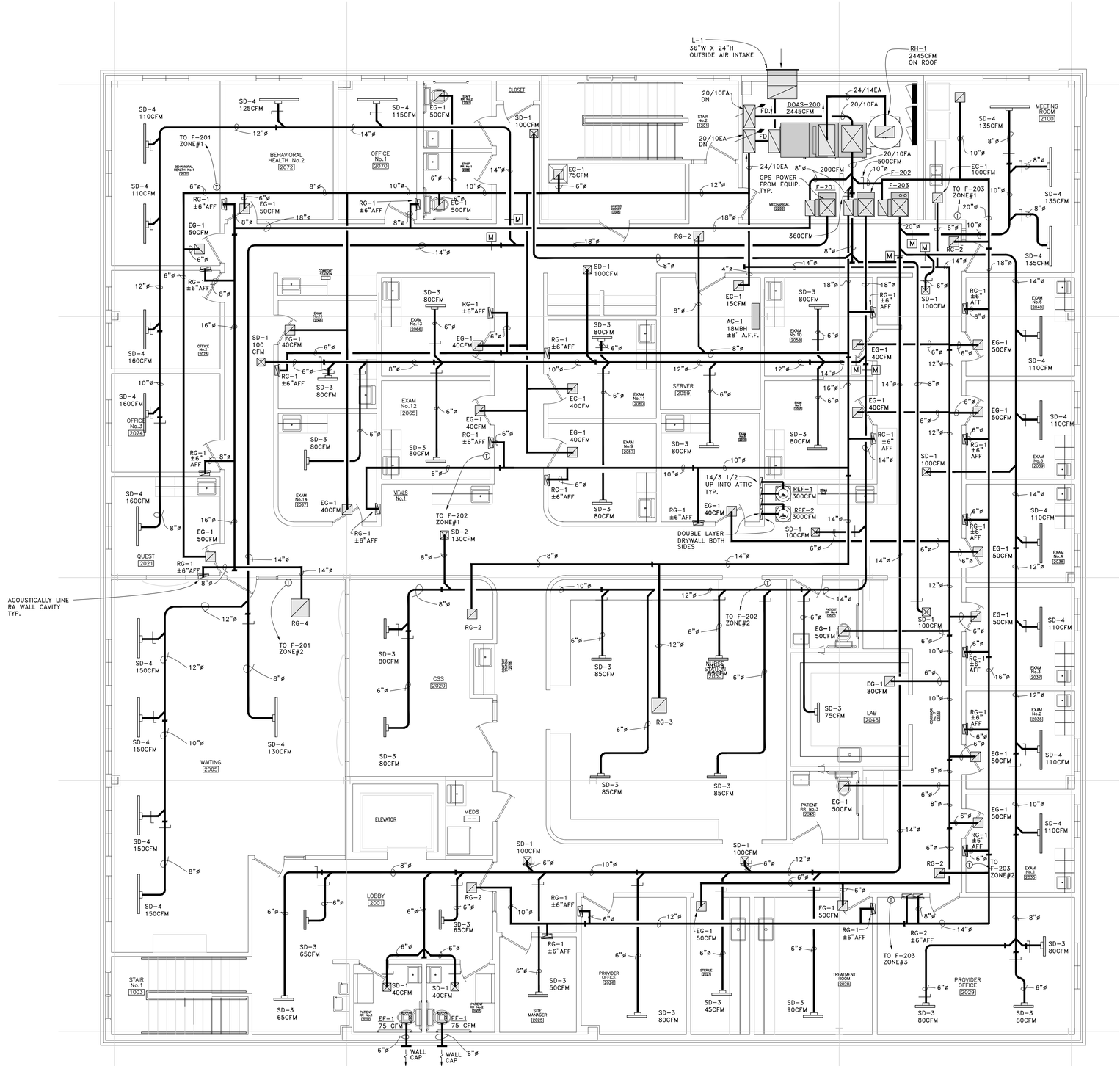

SECOND FLOOR PLAN - MECHANICAL

SCALE: 3/16"=1'-0"

N

BRUCE DIETZ
100 N. RIPLEY
ALPENA, MI 49707

SHEET TITLE
SECOND FLOOR PLAN -
MECHANICAL

PROJECT
ALCONA HEALTH CENTER
OSCODA SERVICES
NEW CLINIC

ISSUED
CODE SUB. JULY 9, 2019

ENGINEER

DESIGNER
JEREMY ADAIR
(989) 733-5231

JOB NUMBER
1903.01

SHEET NO.
M2

STATE OF MICHIGAN
JOHN JOSEPH
RICHARDS
ENGINEER
NO.
43952
LICENSED PROFESSIONAL ENGINEER

PROJECT# 1801-02
12719 S. West Bayshore Dr.
suite 10
Traverse City, MI 49684
(231) 932-0000 office

Apollo
Engineering LLC

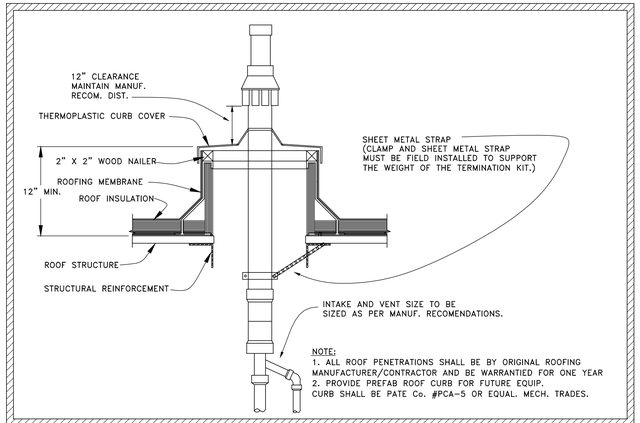

CONCENTRIC TERM. AND CURB FOR EQUIP. DETAIL

NOT TO SCALE

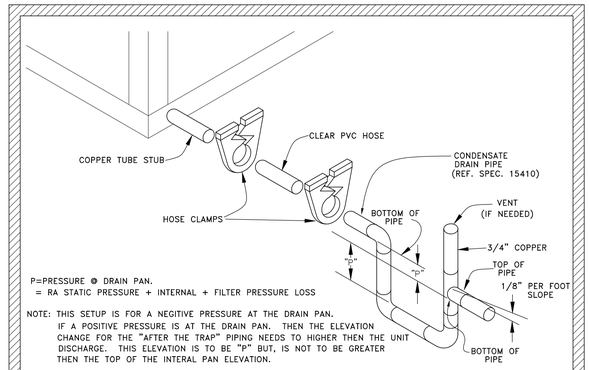

TYP. CONDENSATE DRAIN CONNECTIONS

NOT TO SCALE

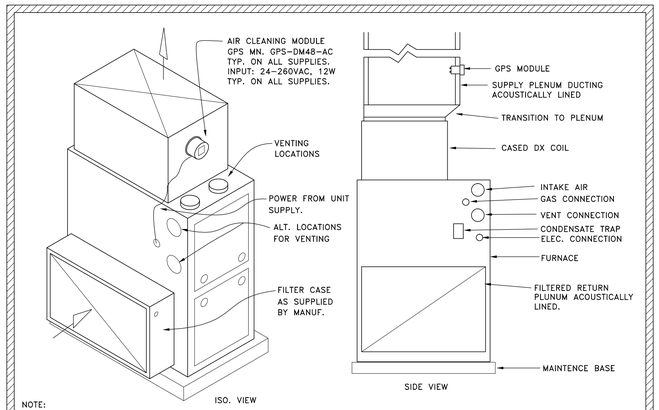

FURNACE AND HEAT PUMP FAN COIL DETAIL

NOT TO SCALE

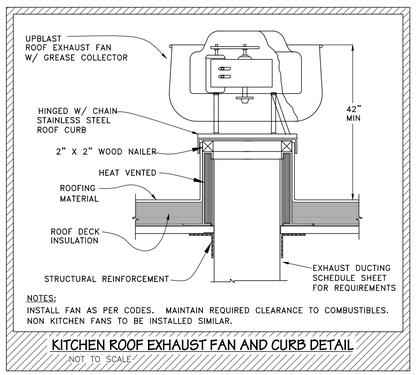

KITCHEN ROOF EXHAUST FAN AND CURB DETAIL

NOT TO SCALE

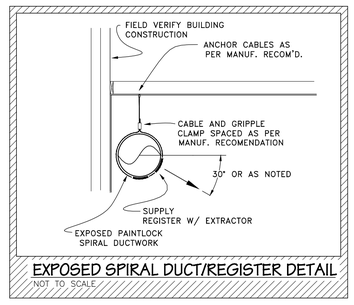

EXPOSED SPIRAL DUCT/REGISTER DETAIL

NOT TO SCALE

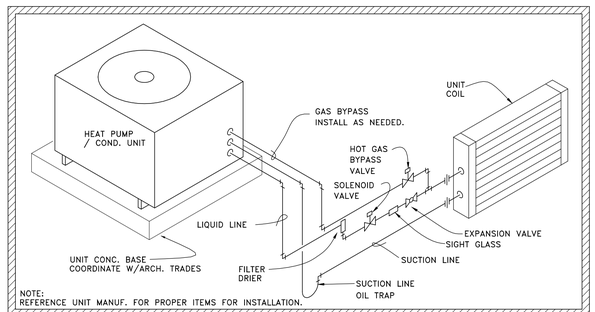

HEAT PUMP / COND. UNIT AND COIL PIPING SCHEMATIC

NOT TO SCALE

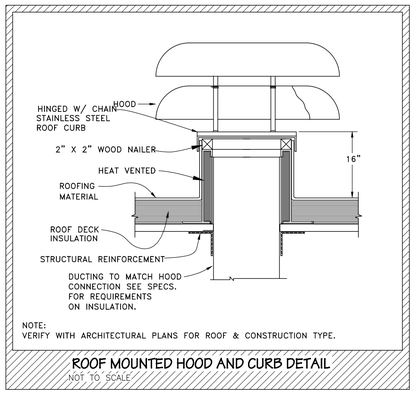

ROOF MOUNTED HOOD AND CURB DETAIL

NOT TO SCALE

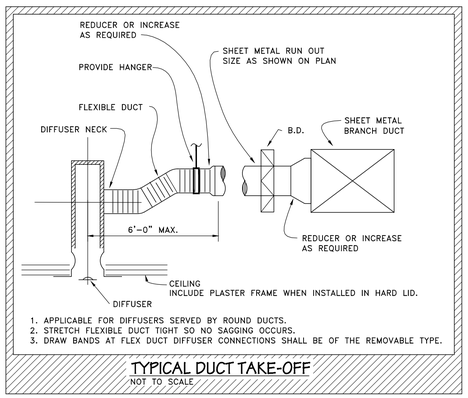

TYPICAL DUCT TAKE-OFF

NOT TO SCALE

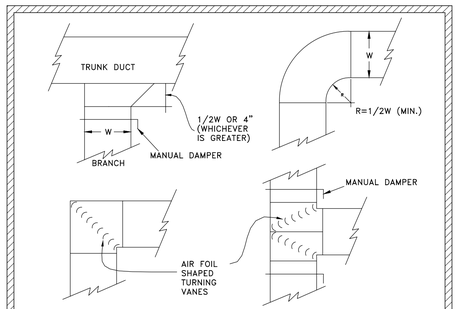

ACCEPTABLE DUCT TURNS

NOT TO SCALE

BRUCE DIETZ
100 N. RIPLEY
ALPENA, MI 49707

SHEET TITLE
DETAILS - MECHANICAL

PROJECT
ALCONA HEALTH CENTER
OSCODA SERVICES
NEW CLINIC

ISSUED
CODE SUB. JULY 9, 2019

ENGINEER

DESIGNER
JEREMY ADAIR
(989) 733-5231

JOB NUMBER
1903.01

SHEET NO.
M3

STATE OF MICHIGAN
JOHN JOSEPH RICHARDS
ENGINEER
NO. 43952
REGISTERED PROFESSIONAL ENGINEER
7/9/2019

PROJECT # 1801-02
Apollo Engineering LLC
1775 S. West Bayshore Dr.
Suite 10 Traverse City, MI
(231) 935-0800 Office

FURNACE SCHEDULE

MARK	MANU.	MODEL No.	TYPE	HTG.MBH INPUT	HTG.MBH OUTPUT	NOMINAL CLG.MBH	CFM	O.A.CFM	ESP	VOLTAGE	H.P.	MIN. CIR. AMPACITY	MAX. FUSE SIZE	REMARKS
F-101	CARRIER	59MN7A060V21-20	UP FLOW	60.6	60	48	1990	340	0.50	120v/1ø	1	19.1	20	SEE NOTES
F-102	CARRIER	59MN7A060V21-20	UP FLOW	60.6	60	24	1905	340	0.50	120v/1ø	1	19.1	20	SEE NOTES
F-103	CARRIER	59MN7A060V21-20	UP FLOW	60.6	60	36	1240	325	0.50	120v/1ø	1	19.1	20	SEE NOTES
F-201	CARRIER	59MN7A060V21-20	UP FLOW	60.6	60	48	1670	200	0.50	120v/1ø	1	19.1	20	SEE NOTES
F-202	CARRIER	59MN7A060V21-20	UP FLOW	60.6	60	24	1210	360	0.50	120v/1ø	1	19.1	20	SEE NOTES
F-203	CARRIER	59MN7A060V21-20	UP FLOW	60.6	60	48	1990	500	0.50	120v/1ø	1	19.1	20	SEE NOTES

NOTES:

1. BASED ON CARRIER.
2. UNIT TO DELIVER NOT LESS THAN 15% CFM LESS THEN STATED VALUES.
3. VERIFY RA CONNECTIONS TO FURNACE IN AGREEMENT WITH MANUFACTURES RECOMMENDATION.
4. UNITS MANUF. TO INCLUDE CONCENTRIC VENT TERMINATION.
5. ALL SYSTEM CONTROLS TO BE INFINITY. FURNACES TO HAVE ZONING CONTROL AS SHOWN.
6. UNIT TO HAVE CONDENSATE TAKEN TO DRAIN. IF REQUIRED SUPPLY LITTLE GIANT CONDENSATE PUMP.
7. UNIT TO HAVE AIR PURIFIER INCLUDED (MN. GAPABXCC****.)
8. UNITS TO HAVE GPS AIR CLEANER INSTALLED.

CONDENSING UNIT SCHEDULE

MARK	UNIT SERVED	MODEL No.	NOMINAL CLG. CAP.	ELECTRICAL			WEIGHT	REMARKS
				OPERATING	MCA	BRKR		
CU-101	F-101	24ANB148A0031	4 TONS	208V, 1ø	28.7A	40	335	SEE NOTES
CU-102	F-102	24ANB124A0031	2 TONS	208V, 1ø	15.7A	25	282	SEE NOTES
CU-103	F-103	24ANB136A0031	3 TONS	208V, 1ø	15.7A	25	282	SEE NOTES
CU-201	F-201	24ANB148A0031	4 TONS	208V, 1ø	28.7A	40	335	SEE NOTES
CU-202	F-202	24ANB124A0031	2 TONS	208V, 1ø	15.7A	25	282	SEE NOTES
CU-203	F-203	24ANB148A0031	4 TONS	208V, 1ø	28.7A	40	335	SEE NOTES
CU-200	DOAS-200	CFA-007-A-A-8-DJ00H	5 TONS	208V, 3ø	28.0A	45	570	SEE NOTES

NOTES:

1. BASED ON CARRIER AND AAON.
2. CARRIER UNITS TO BE HAVE 2-STAGED SCROLL COMPRESSORS.
3. M.C. TO MOUNT UNIT ON GROUND BASE.
4. UNITS TO HAVE PURON R-410R REFRIGERANT. 21SEER
5. UNITS TO HAVE INFINITY CONTROL. AAON TO HAVE STAND ALONE CONTROLS.

EXHAUST FAN SCHEDULE

MARK	MODEL No.	CFM @ E.S.P.	RATED SONES	ELECTRICAL	APPROX. WEIGHT	REMARKS
EF-1	GC-164	75 @ 0.2"	0.9	120V, 1ø, 60.3W	15	CEILING GRILLE INCLUDED.
REF-1	ACRUD-90R15DH	300 @ 0.5"	1.4	120V, 1ø, 129W	35	CEILING GRILLE INCLUDED.
REF-2	ACRUD-90R15DH	300 @ 0.5"	1.4	120V, 1ø, 220W	35	CEILING GRILLE INCLUDED.

NOTES:

1. BASED ON LOREN-COOK.
2. ENLARGE DUCTING OUT OF UNIT AS REQ'D.
3. PROVIDE WALL CAP AND FACTORY MTD. SPEED CONTROLER.
4. REF-2 TO HAVE NON-SPARKING CONSTRUCTION FOR N2O AND O2 EXHAUST.

DIFFUSER / GRILLE SCHEDULE

MARK	MODEL No.	CFM	SIZE	BALANCING DAMPER	COLOR	REMARKS
SD-1	TDC	50-120	9"x9", 6"ø NECK	NO	WHITE	BORDER TYPE 1, SEE NOTE #4
SD-2	TDC	130-210	9"x9", 8"ø NECK	NO	WHITE	BORDER TYPE 1, SEE NOTE #4
SD-3	FLI-10	50-100	24"LG, 1"SLT, 6' INLET	YES	WHITE	BORDER TYPE 66, SEE NOTE #3
SD-4	FLI-10	120-180	48"LG, 1"SLT, 8' INLET	YES	WHITE	BORDER TYPE 66, SEE NOTE #3
SR-1	S300FL	120	14"X3"	YES	WHITE	W/RADIUS END, SEE NOTE #7
RG-1	355RL	80-150	14"x6"	NO	WHITE	BORDER TYPE 1
RG-2	355RL	160-400	24"x6"	NO	WHITE	BORDER TYPE 1
RG-3	50F	80-650	12"x12"	NO	WHITE	BORDER TYPE 1
RG-4	50F	800-1900	22"X22"	NO	WHITE	BORDER TYPE 1
EG-1	50F	80-150	8"x8"	YES	WHITE	BORDER TYPE 1
TG-1	355RL	80-150	30"x8"	NO	WHITE	BORDER TYPE 1

NOTES:

1. BASED ON TITUS. (DISCOVAIR, PRICE OR KRUGER MAY BE BID EQUALS.)
2. REVIEW COLOR W/ARCHITECT BEFORE ORDERING.
3. FLOWBAR DIFFUSORS TO BE SUPPLIED WITH INSULATED PLENUM, END CAPS AND HANGER CLIPS. PROVIDE PLASTER FRAME WITH DIFFUSER IF MOUNTED IN DRYWALL CEILING.
4. ALL SUPPLY AIR DIFFUSERS SHALL HAVE A 4-WAY AIR PATTERN UNLESS OTHERWISE INDICATED (SEE PLANS).
5. PROVIDE ALL DUCT COLLARS, TRANSITIONS, CONNECTIONS AND SUPPORTS.
6. PAINT INSIDE OF DUCT BEHIND REGISTERS AND GRILLES FLAT BLACK.
7. REGISTER TO HAVE AIR SCOOP AND DAMPER.

DRYER TERMINATION SCHEDULE

MARK	MODEL No.	UNIT SERVED	TYPE	CFM	COLOR	REMARKS
DV-1	SEIHO SFZC	UNIT DRYERS	4"DIA	200	ANODZ.	ALUM. CONSTRUCTION, BACKDRAFT DAMPER.

NOTES:

1. BASED ON SEIHO.
2. PROVIDE FLANGE, BIRD SCREEN
3. REVIEW COLOR W/ARCHITECT BEFORE ORDERING.

DRYER VENTING EQUIPMENT

SYMBOL	BRAND	MODEL #	DESCRIPTION
BF	FANTECH	DBF4XLT	BOOSTER FAN, 120V, 83W, PRESSURE SWITCH, LED OP. LIGHT.
	FANTECH	DBLT4	LINT TRAP. INSTALLED ON THE INLET SIDE OF THE BOOSTER FAN.

NOTES:

1. SYSTEM TO BE SIMILAR TO FANTEC.
2. INSTALLATION TO BE AS PER MANUFACTURER'S RECOMMENDATIONS.

GAS MONITORING SYSTEM SCHEDULE

MARK	BRAND	DESCRIPTION
(C)	CRITICAL ENV.	SYSTEM TO BE A FULLY OPERATIONAL OXYGEN DEPETION ENRICHMENT SYSTEM.

Supply a dual (sensor) channel, Oxygen monitoring system, model GEM-DEO2-EO2-N for the monitoring of Oxygen (O2) depletion, housed in a rugged, wall mount, drip-proof PVC enclosure with hinged, secured door and LED digital display. System power shall be 24 VAC / VDC nominal. The system shall consist of a mini-controller with an integral electrochemical Oxygen (O2) sensor and one remote analog sensor transmitter model LPT-A-O2 with electrochemical Oxygen (O2) sensor. The measurement range of the electrochemical Oxygen (O2) sensors shall be 0 - 25% Volume. The system must be accurate enough to measure to government workplace hazardous gas exposure standards.
If the installer is supplying line voltage operating power, supply a totally enclosed transformer model TIB-2250M (115 VAC input with 22 VAC output to GEM controller).
The mini-controller shall provide low voltage regulated 24 VDC power to the remote analog sensor transmitter over installer supplied 3-conductor, shielded wire/cable in conduit. The mini-controller and the remote mount sensor transmitter shall each have an LED indicating light for power, low alarm, high alarm,
and fault condition plus channel indication LED, plus an LED digital display for real time Oxygen (O2) concentration display. The mini-controller shall have an audible alarm with silence push-button and two SPDT dry contact alarm relays, each rated 5A at 240 VAC. The system shall also provide field adjustable time delays for "delays on make" and "delays on break" for each relay output to allow custom configuration of control by the system relays, if desired.
The mini-controller shall provide a circuit test button to allow the user to confirm system operation and alarm relay control. The mini controller shall also provide a push-button to allow the user to override the system control and operate ventilation fan(s) continuously for 15-minute segments to evacuate air from the monitored space / room. Installation height for the mini controller is 4' to 6' (feet) from the floor.
Installation height for the remote electrochemical Oxygen sensor transmitter is 6" to 10" (inches) from the floor.
System operation shall be as follows;
System relays are normally energized in non-gas-alarm state so they act in fail-safe operation.
Upon detection of 19.5% Oxygen in air, the system shall illuminate the Low alarm LED (amber), and the low alarm relay shall de-energize activating single-speed exhaust fans or low speed of two-speed exhaust
fans plus make up air fans.
Upon detection of 23.5% Oxygen in air, the system shall illuminate the High alarm LED (red), the system audible alarm will be activated and the high gas alarm relay shall de-energize activating high speed of two-speed exhaust fans or remote alarm devices.
Audible alarm can be silenced from the front panel push button.
In the course of operation the digital display will continuously display real time Oxygen levels detected by the sensor. In the event of a fail condition, the system audible alarm shall be activated and the fail LED on
the front panel shall illuminate red.
The contractor shall provide all wiring, conduit and interconnection required for a successful installation.
System should be tested and commissioned after installation, with a report provided after the site visi

ALL WIRING TO BE IN CONDUIT.

CONTACT: BLUEFILED ENGINEERING SYSTEMS 1-888-445-4822

ROOF HOOD SCHEDULE

MARK	MODEL No.	CFM @ E.S.P.	WT.	ACCESSORIES
RH-1	TR24	2445 @ 0.1"	150#	UNIT TO HAVE BIRD SCREEN, PROVIDE CURB FOR MEMBRANE ROOF.

NOTES:

1. BASED ON LOREN COOK. (GREENHECK, OR CARNES MAY BE BID AS EQUAL).

WALL LOUVER SCHEDULE

MARK	MODEL No.	UNIT SERVED	TYPE	CFM	SIZE W x H	REMARKS
L-1	ELF375DX	DOAS-200	INTAKE	2445	36" X 24"	SEE NOTES

NOTES:

1. BASED ON RUSKIN.
2. PROVIDE INSET INSTALLATION (VERIFY BEFORE ORDERING), BIRD SCREEN AND KYNAR FINISH.
3. REVIEW COLOR W/ARCHITECT BEFORE ORDERING FINISH TO BE KYNAR.

SPLIT SYSTEM TERMINAL UNIT SCHEDULE

MARK	UNIT SERVED	MODEL No.	NOMINAL CLG. CAP.	ELECTRICAL		WEIGHT	REMARKS
				OPERATING	MCA		
AC-1	HP-1	PKA-A18HA6	18,000BTUH	208V, 1ø	1.0A	29	SEE NOTES

NOTES:

1. BASED ON MITSUBISHI. OTHERS MAY BE BID AS VOLENTARY ALT.
2. TERMINAL UNIT'S POWER TO BE FED FROM HP OUTDOOR UNIT.

DOAS UNIT SCHEDULE

MARK	MANU.	MODEL No.	AUX. HEAT MBH GAS IN/OUT	EQUIVALENT COOLING MBH	CFM	MIN. O.A.CFM	ESP IN-WC	TSP IN-WC	DX COOLING COIL						SA/EA FAN MOTOR HP	VOLTAGE	MIN. CIR. AMPACITY	MAX. FUSE SIZE	UNIT WEIGHT
									EAT (DB/WB)	LAT (DB/WB)	PD	FPI	ROWS	FPM					
DOAS-200	AAON	V3-CRB-8-0-161C-BLA	160.0/153.6	145.68	2445	2445	1.00"	2.66"	81.0/66.6	57.8/56.3	0.3"	12	6	315	2.3 ECM	208v/3ø	13	15	2175

NOTES:

1. BASED ON AAON.
2. PROVIDE FILTER MIXING BOX WITH MOTORIZED DAMPERS, GAS SECTION, DX HP.COMP., HEAT RECOVERY SECTION, & VERTICAL FAN SECTION.
3. PROVIDE DUCT MOUNTED SMOKE DETECTOR IN S.A. AS REQUIRED BY CODE TO SHUT DOWN UNIT UPON DETECTION OF SMOKE.
4. UNITS TO HAVE ECM DIRECT DRIVE FAN MOTORS. SPEED CONTROL TO BE BY CONTROLS CONTRACTOR.
5. UNITS TO HAVE PRE-FILTER AND FINAL FILTERS (MERV 13).
6. UNITS TO HAVE DOUBLE WALL CONSTRUCTION.
7. CONTRACTOR TO VERIFY RH/LH CONFIGURATION.
8. UNITS TO HAVE GPS AIR CLEANER INSTALLED.

SPLIT SYSTEM HEAT PUMP UNIT SCHEDULE

MARK	SPACE SERVED	MODEL No.	NOMINAL CLG. CAP.	ELECTRICAL			WEIGHT	REMARKS
				OPERATING	MCA	BRKR		
HP-1	IT CLOSET	PUZ-A18NHA6	1.5 TON	208V, 1ø	13.0	15	91	SEE NOTES

NOTES:

1. BASED ON MITSUBISHI. OTHERS MAY BE BID AS VOLUNTARY ALT.
2. UNITS TO BE INVERTER DRIVEN. LOW AMBIENT OPERATION (0DEG F). INCLUDE BAFFLES.
3. 4" CONCRETE PAD BY ARCHITECTURAL TRADE.
4. PIPING LENGTH TO NOT EXCEED 100 FT. PER INDOOR UNIT AS PER MANUFACTURER'S INSTALLATION INSTRUCTIONS.

STATE OF MICHIGAN
JOHN JOSEPH RICHARDS
ENGINEER
NO. 43952
LICENSED PROFESSIONAL ENGINEER
July 9, 2019

PROJECT# 1801-02
Apollo Engineering LLC
12719 S. West Bayshore Dr.
sutite 10
Traverse City, MI 49684
(231) 932-0800 office

BRUCE DIETZ
100 N. RIPLEY
ALPENA, MI 49707

SHEET TITLE
SCHEDULES - MECHANICAL

PROJECT
ALCONA HEALTH CENTER
OSCODA SERVICES
NEW CLINIC

ISSUED
CODE SUB. JULY 9, 2019

ENGINEER

DESIGNER
JEREMY ADAIR
(989) 733-5231

JOB NUMBER
1903.01

SHEET NO.
M4

FIRST FLOOR PLAN - ELECTRICAL POWER

SCALE: 1/8"=1'-0"

NOTE: VERIFY LOCATION AND QUANTITY OF PT/OT EQUIPMENT AND ADJUST LOCATIONS AND QUANTITIES AS REQ'D.

NOTE: COORDINATE ALL OUTLETS AND DATA LOCATIONS W/ OWNER/MANUF. EQUIP.

NOTE: COORDINATE ALL OUTLETS AND DATA LOCATIONS W/ OWNER/MANUF. EQUIP.

NOTE: SEE PATTERSON DENTAL DRAWINGS AND SPECIFICATIONS FOR MORE DETAILED ELECTRICAL WIRING AND CONNECTIONS.

BRUCE DIETZ
100 N. RIPLEY
ALPENA, MI 49707

ALCONA HEALTH CENTER
OSCODA SERVICES
NEW CLINIC

PROJECT

ISSUED
CODE SUB. JUNE 09, 2019

SHEET TITLE
FIRST FLOOR PLAN - ELECTRICAL POWER

ENGINEER

DESIGNER:
JEREMY ADAIR
(989) 733-5231
JOB NUMBER
1903.01
SHEET NO.
E1

PROJECT # 1801-02
Apollo Engineering LLC
1310 S. West Bayshore Dr.
Suite 110
Traverse City, MI 49684
(231) 935-0500 office

STATE OF MICHIGAN
JOHN JOSEPH RICHARDS
ENGINEER
NO. 43952
LICENSED PROFESSIONAL ENGINEER

Apollo
Engineering LLC

PROJECT# 1801-02

12719 S. West Bayshore Dr
suite 10
Traverse City, MI 49684
(231) 932-0800 office

E2	SHEET NO. 1903.01	DESIGNER: JEREMY ADAIR (989) 733-5231 JOB NUMBER	ENGINEER	CODE SUB. JUNE 09, 2019	PROJECT: ALCONA HEALTH CENTER OSCODA SERVICES NEW CLINIC

SHEET TITLE: SECOND FLOOR PLAN - ELECTRICAL POWER

BRUCE DIETZ
100 N. RIPLEY
ALPENA, MI 49707

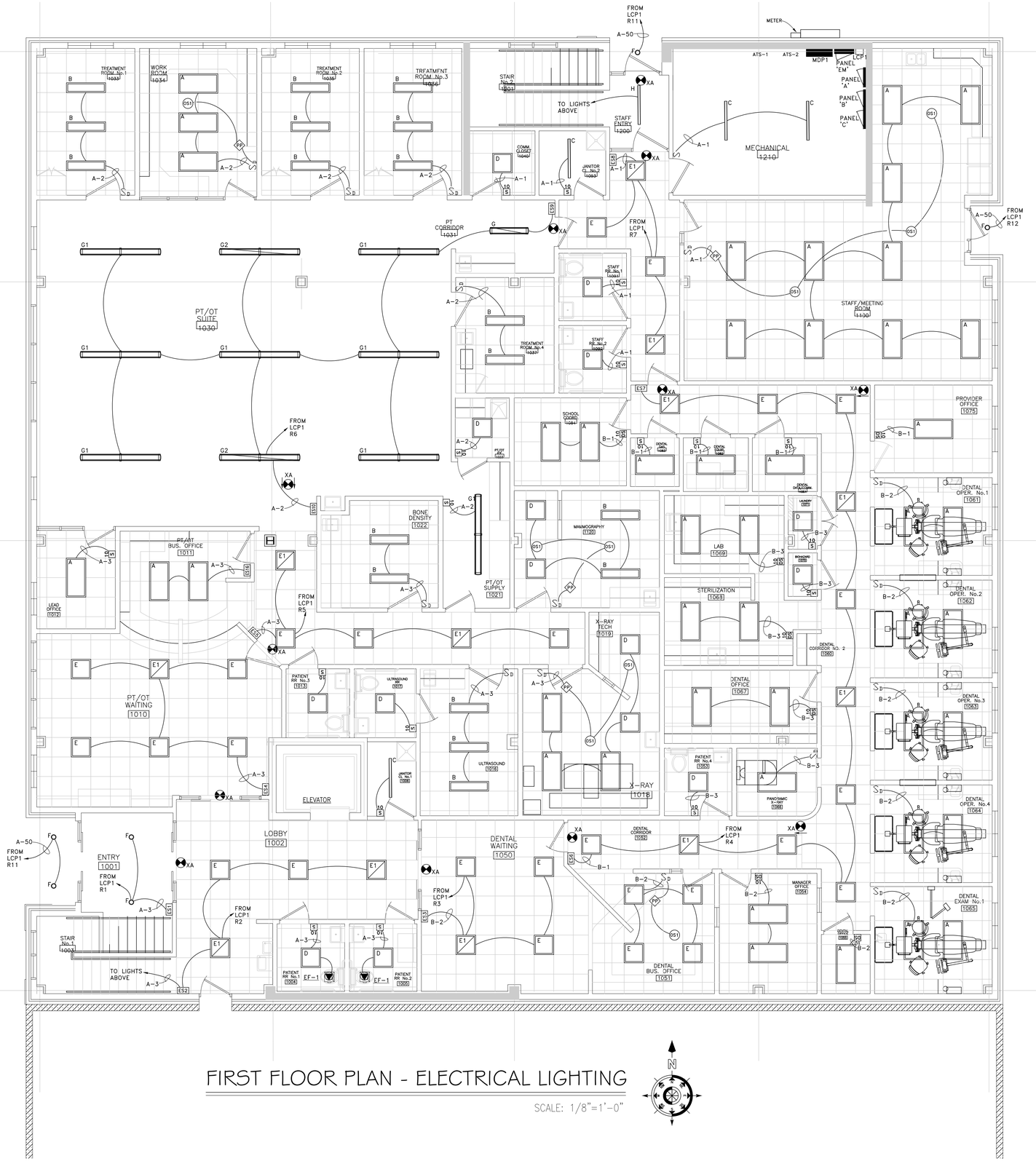

FIRST FLOOR PLAN - ELECTRICAL LIGHTING

SCALE: 1/8"=1'-0"

BRUCE DIETZ
100 N. RIPLEY
ALPENA, MI 49707

SHEET TITLE
FIRST FLOOR PLAN - ELECTRICAL LIGHTING

PROJECT
ALCONA HEALTH CENTER
OSCODA SERVICES
NEW CLINIC

ISSUED
CODE SUB. JUNE 09, 2019

ENGINEER

DESIGNER
JEREMY ADAIR
(989) 733-5231
JOB NUMBER
1903.01
SHEET NO.
E3

PROJECT# 1801-02
3370 E. West Bayshore Dr.
Suite 110
Traverse City, MI 49684
(231) 590.0900 office
Apollo Engineering LLC

STATE OF MICHIGAN
JOHN JOSEPH RICHARDS
ENGINEER
NO. 43952

SECOND FLOOR PLAN - ELECTRICAL LIGHTING

SCALE: 1/8"=1'-0"

N

BRUCE DIETZ
100 N. RIPLEY
ALPENA, MI 49707

SHEET TITLE
SECOND FLOOR PLAN - ELECTRICAL LIGHTING

PROJECT
ALCONA HEALTH CENTER
OSCODA SERVICES
NEW CLINIC

ISSUED
CODE SUB. JUNE 09, 2019

ENGINEER

DESIGNER
JEREMY ADAIR
(989) 733-5231

JOB NUMBER
1903.01

SHEET NO.
E4

PROJECT# 1801-02
12719 S. West Bayshore Dr.
Suite 10
Traverse City, MI 49684
(231) 930-0500 office

Apollo Engineering LLC

STATE OF MICHIGAN
JOHN JOSEPH RICHARDS
ENGINEER
NO. 43952
LICENSED PROFESSIONAL ENGINEER

ELECTRICAL NOTES

1. PRIOR TO SUBMITTING A PROPOSAL, BIDDER SHALL HAVE VISITED THE CONSTRUCTION SITE. HE SHALL BE FAMILIAR WITH THE EXISTING CONDITIONS UNDER WHICH HE WILL HAVE TO OPERATE AND WHICH WILL IN ANY WAY AFFECT THE WORK UNDER THIS CONTRACT. NO SUBSEQUENT ALLOWANCE WILL BE MADE IN THIS CONNECTION ON BEHALF OF THE CONTRACTOR FOR ANY ERROR OR NEGLIGENCE ON HIS
2. ELECTRICAL WORK SHALL COMPLY WITH THE LATEST ENFORCEABLE EDITION OF THE N.E.C., LOCAL AND STATE CODES, ORDINANCES, REGULATIONS, INCLUDING THE OCCUPATIONAL SAFETY AND HEALTH ACT (OSHA), AND ADA GUIDELINES WITH THE LOCAL CODE AUTHORITIES HAVING JURISDICTION.
3. ELECTRICAL CONTRACTOR SHALL OBTAIN ALL PERMITS, PAY ALL FEES, INCLUDING COSTS ASSESSED BY THE ELECTRIC UTILITY COMPANIES, AND ARRANGE FOR ALL INSPECTIONS FOR HIS WORK. AT THE COMPLETION OF ELECTRICAL WORK, THE ELECTRICAL CONTRACTOR SHALL FURNISH THE OWNER WITH ALL CERTIFICATES OF FINAL INSPECTION AND APPROVALS.
4. ELECTRICAL MATERIALS SHALL BE NEW, AND BEAR THE "UL" LABEL
5. BRANCH CIRCUIT WIRE FOR LIGHTING, RECEPTACLE AND SMALL POWER SHALL BE COPPER, RATED 75 DEGREES C, MINIMUM SIZE #12 AWG, AND BE TYPE "THHN", AND BE INSTALLED IN EMT. UNLESS OTHERWISE NOTED OR REQUIRED BY CODE. FEEDERS AND SECONDARY SERVICE CONDUCTORS SHALL BE STRANDED COPPER WITH 600 VOLT INSULATION, RATED 90 DEGREES C, TYPE "THHN", AND BE INSTALLED IN EMT OR PVC CONDUIT, MINIMUM SIZE 1/2" UNLESS OTHERWISE NOTED OR REQUIRED BY CODE. ALL WIRE AND CABLE SHALL BE NEW AND SHALL BE DELIVERED TO PROJECT IN UNBROKEN AND UNDAMAGED CARTONS AND REELS.
6. FUSES SHALL BE "UL" LISTED, DUAL AS MANUFACTURED BY BUSMAN CO., OR APPROVED EQUAL (200,000 ERIC).
7. PLATES FOR SWITCHES AND RECEPTACLES SHALL BE PLASTIC. COLOR TO BE WHITE.
8. PANELS ARE TO BE RATED 120/208V, 3 PHASE, 4W, WITH PLUG TYPE BRANCH CIRCUIT BREAKERS RATED A MINIMUM 10,000 A.I.C. EXT'G PANELS TO HAVE NEW TYPE WRITTEN PANEL SCHEDULE AND PLASTIC ENGRAVED NAME PLATES.
9. ELECTRICAL CONTRACTOR SHALL VERIFY EXACT ELECTRIC UTILITY COMPANIES SERVICE POINTS AND PRIMARY SERVICE CONDUIT, ROUTING, AND SIZE WITH UTILITY COMPANY SERVICE PLANNERS PRIOR TO BEGINNING WORK.
10. ELECTRICAL CONTRACTOR SHALL GUARANTEE ALL WORK INSTALLED UNDER HIS CONTRACT TO BE FREE FROM DEFECTIVE WORKMANSHIP AND MATERIALS FOR A PERIOD OF ONE YEAR AFTER THE ACCEPTANCE OF THE BUILDING BY THE OWNER. SHOULD DEFECTS OCCUR WITHIN THIS PERIOD, REPAIR AND/OR REPLACE DEFECTIVE ITEMS AT NO EXPENSE
11. ELECTRICAL CONTRACTOR SHALL COORDINATE LOCATIONS OF HIS EQUIPMENT AND WORK WITH OTHER BUILDING TRADES TO AVOID ANY INTERFERENCE'S BETWEEN HIS WORK AND THE WORK OF OTHER BUILDING TRADES. IF ANY DISCREPANCIES OCCUR, CONSULT WITH THE ARCHITECT AND/OR OWNER BEFORE CONTINUING.
12. THE CONTRACTOR SHALL BE HELD FULLY RESPONSIBLE FOR THE PROPER RESTORATION OF ALL EXISTING SURFACES REQUIRING PATCHING, PLASTERING, PAINTING AND/OR OTHER REPAIR DUE TO THE INSTALLATION OF ELECTRICAL WORK UNDER THE TERMS OF THIS SPECIFICATION. CLOSE ALL OPENINGS, REPAIR ALL SURFACES,
13. THE ELECTRICAL CONTRACTOR SHALL PERIODICALLY REMOVE FROM THE SITE ALL DEBRIS AND RUBBISH ACCUMULATING AS A RESULT OF THE ELECTRICAL INSTALLATION. UPON COMPLETION OF THE PROJECT, HE SHALL DISPOSE OF ALL DEBRIS AND RUBBISH AND SHALL LEAVE ALL AREAS CLEAN. THE INTERIORS OF ALL CABINETS, PULL BOXES, AND EQUIPMENT ENCLOSURES SHALL BE FREE OF ANY DEBRIS.
14. UNDERGROUND CONDUIT TO BE SCHEDULE 40 PVC.
15. ELECTRICAL JOINTS WILL BE PERMITTED ONLY IN JUNCTION AND OUTLET BOXES. ALL JOINTS SHALL BE FIRMLY BONDED TOGETHER AND TAPED OR SHALL BE MADE WITH MECHANICAL CONNECTORS.
16. ELECTRICAL CONTRACTOR TO VERIFY ALL EXT'G ITEMS TO REMAIN AND RECONNECT/RELOCATE NEW CIRCUITS INDICATED IN THE PANEL SCHEULE AS REQ'D TO ENERGIZE THE COMPLETE BUILDING AS INTENDED.
17. PATIENT CARE SPACE (SPACE WITHIN A HEALTH CARE FACILITY WHERE PATIENTS ARE INTENDED TO BE EXAMINED OR TREATED) ARE TO COMPLY WITH NEC "SECTION 517", WITH SPECIAL ATTENTION TO THE FOLLOWING SECTIONS.

    517.13 GROUNDING OF RECEPTACLES AND FIXED ELECTRICAL EQUIPMENT IN PATIENT CARE AREAS.

    517.14 PANELBOARD BONDING.

    NOTE: ALL PATIENT CARE SPACES AT THIS FACILITY ARE INTENDED TO BE "BASIC CARE SPACES".
18. ALL EQUIPMENT IS TO BE INSTALLED PER MANUFACTURERS INSTRUCTIONS.
19. SECURE LIGHT FIXTURES TO MAINS ON THE CEILING GRID OR THE STRUCTURE IN ACCORDANCE WITH SECTION 410.36(B)

FIRE ALARM & FIRE PROTECTION KEY

SYMBOL	DESCRIPTION	PART NO.
FACP	FIRE ALARM CONTROL PANEL	EST 1064GD
RA	REMOTE ANNUNCIATOR	EST RLCD-C
F	MANUAL PULL STATION	EST SIGA-270
SD	PHOTOELECTRIC SMOKE DETECTOR	EST SIGA-PD
	DETECTOR BASE	EST SIGA-SB
DM	DUAL MONITOR MODULE	EST SIGA-CT2
CR	CONTROL RELAY MODULE	EST SIGA-CR
TS	TAMPER SWITCH	
FS	FLOW SWITCH	

LOCAL EST REPRESENTATIVE IS KOORSEN FIRE & SECURITY, CONTACT DENNIS SARGENT AT (231) 941-6405

LIGHTING CONTROLS

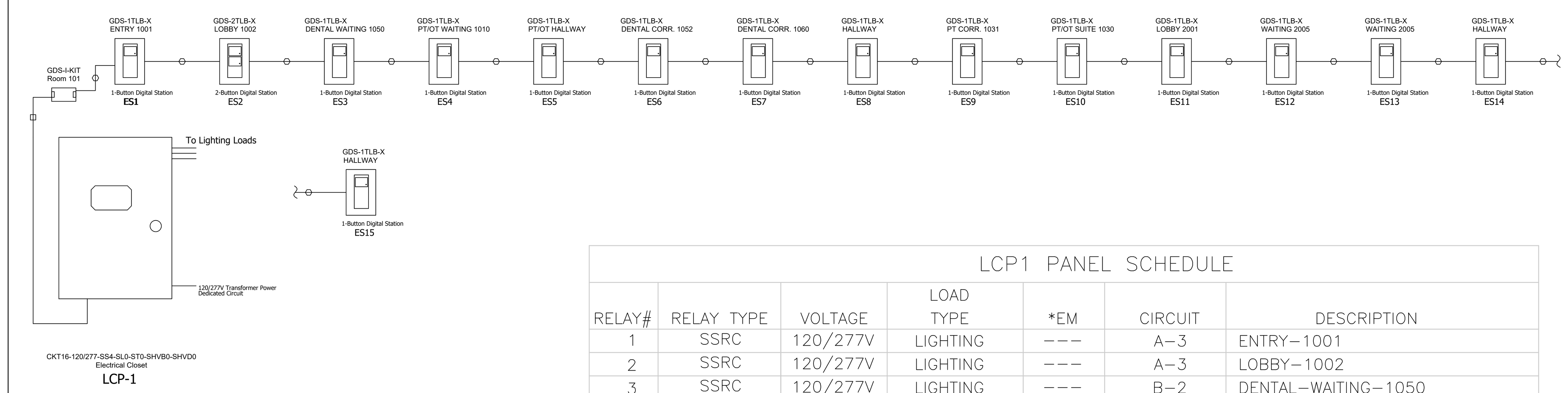

Cables

◇	RS485	RS-485 Network Cable, Cooper GG9841(Non Plenum), Cooper GG89841(Plenum) or equivalent
□	RS232	RS-232 Cable (6 feet), provided with product
○	CAN	Use Belden 1502R non-plenum cable or Belden 1502P plenum cable.
△	LV3	Low Voltage Input wire - #18 AWG, 3 conductor wire

LCP1 PANEL SCHEDULE

RELAY#	RELAY TYPE	VOLTAGE	LOAD TYPE	*EM	CIRCUIT	DESCRIPTION
1	SSRC	120/277V	LIGHTING	---	A-3	ENTRY-1001
2	SSRC	120/277V	LIGHTING	---	A-3	LOBBY-1002
3	SSRC	120/277V	LIGHTING	---	B-2	DENTAL-WAITING-1050
4	SSRC	120/277V	LIGHTING	---	B-1	DENTAL-CORR-1052
5	SSRC	120/277V	LIGHTING	---	A-3	PT/OT-CORR.
6	SSRC	120/277V	LIGHTING	---	A-2	PT/PT-SUITE-1030
7	SSRC	120/277V	LIGHTING	---	A-1	HALLWAY
8	SSRC	120/277V	LIGHTING	---	D-1	LOBBY-2001
9	SSRC	120/277V	LIGHTING	---	D-2	2ND-LEVEL-HALLWAYS
10	SSRC	120/277V	LIGHTING	---	F-1	WAITING-2005
11	SSRC	120/277V	LIGHTING	---	F-2	EXTERIOR
12	SSRC	120/277V	LIGHTING	---	---	SPARE
13	SSRC	120/277V	LIGHTING	---	---	SPARE
14	SSRC	120/277V	LIGHTING	---	---	SPARE
15	SSRC	120/277V	LIGHTING	---	---	SPARE
16	SSRC	120/277V	LIGHTING	---	---	SPARE

OCCUPANCY LEGEND

SYMBOL	BRAND	MODEL #	DESCRIPTION
10 SD	GREENGATE	OSW-P-010-X	WALLBOX MOUNTED PASSIVE INFRARED OCCUPANCY SENSOR WITH 0-10V DIMMING
10 S	GREENGATE	ONW-P-1001-MV-X	WALLBOX MOUNTED PASSIVE INFRARED OCCUPANCY SENSOR
M S	GREENGATE	ONW-D-1001-MV-X	WALLBOX MOUNTED DUAL-TECH OCCUPANCY SENSOR
OS1	GREENGATE	OAC-P-1500	CEILING MOUNTED PASSIVE INFRARED OCCUPANCY SENSOR (1500 SQ. FT)
OS2	GREENGATE	OAC-DT-2000	CEILING MOUNTED DUAL-TECH OCCUPANCY SENSOR (2000 SQ. FT)
OS3	GREENGATE	OAC-DT-1000	CEILING MOUNTED MULTI-TECHNOLOGY OCCUPANCY SENSOR (1000 SQ. FT)
PP	GREENGATE	SP20-MV	POWER PACK FOR 120/277VAC SYSTEM

LIGHTING FIXTURE SCHEDULE

TYPE	BRAND	MODEL #	MOUNTING TYPE	LAMP	TOTAL FIXTURE POWER	VOLTAGE	NOTES:
A	METALUX	24CZ-LD5-45-UNV-L835-CD1-U	RECESSED	4558LM/3500K/LED	35.7W	UNV	–
B	METALUX	14CZ-LD5-39-UNV-L835-CD1-U	RECESSED	4035LM/3500K/LED	35.7W	UNV	–
C	METALUX	4SNLED-LD5-46SL-LN-UNV-EL14W-L835-CD1-SVPD1-U	SURFACE	4708LM/3500K/LED	34.6W	UNV	–
D	METALUX	22CZ-LD5-29-UNV-L835-CD1-U	RECESSED	2899LM/3500K/LED	23.5W	UNV	–
E	METALUX	22FP4235C	RECESSED	4641LM/3500K/LED	38.9W	UNV	–
E1	METALUX	22FP4235C-EBPLED14W	RECESSED	4641LM/3500K/LED	38.9W	UNV	BATTERY PACK FIELD INSTALLED BY E.C.
F	PORTFOLIO	PD615ED010B-PD6B835-61VMH	RECESSED	1500LM/3500K/LED	17.1W	UNV	–
F1	PORTFOLIO	PD615ED010BIEM-PD6B835-61VEMH	RECESSED	1500LM/3500K/LED	17.1W	UNV	W/ BATTERY PACK
G	METALUX	4WSL-LD2-45-SPS-UNV-EL14W-L835-CD1-U	PENDENT	4502LM/3500K/LED	39.9W	UNV	W/ BATTERY PACK
G1	METALUX	8WSL-LD2-90-SPS-UNV-L835-CD1-U	PENDENT	9004LM/3500K/LED	80.6W	UNV	–
G2	METALUX	8WSL-LD2-90-SPS-UNV-EL14W-L835-CD1-U	PENDENT	9004LM/3500K/LED	80.6W	UNV	W/ BATTERY PACK
H	METALUX	4SWLED-LD4-40SL-LN-UNV-EL14W-L835-CD1-SVPD1-U	SURFACE	4000LM/3500K/LED	40.4W	UNV	W/ BATTERY PACK
XA	SURELITES	APCH7R	SURACE	(1) LED	3W	120V	WITHOUT LED HEADS
EM	SURELITES	SRM50WH	SURACE	(1) LED	5W	120V	–

WIRE SIZE REQUIREMENTS

NOTE:
BASED ON A MAXIMUM OF 6-VOLT DROP (5%) ON 120V CIRCUITS. WIRES FOR RUNS OVER 100'-0" SHALL BE DETERMINED ON THIS A MAXIMUM OF A 5% DROP ALLOWED.

BRANCH CIRCUIT AMPS	LENGTH OF RUN - FROM PANEL TO FIRST CONNECTION - FEET								
AMPS	50'	60'	70'	80'	90'	100'	110'	120'	130'
15	#12	#12	#12	#12	#12	#12	#10	#10	#10
20	#12	#12	#12	#10	#10	#10	#10	#10	#8
30	#10	#10	#10	#10	#8	#8	#8	#8	#6

ELECTRIC WALL HEATER SCHEDULE

MARK	MANU.	MODEL No.	BTU/HR.	WATTS	ELECTRICAL	REMARKS
WH-1	MARKEL	J3425T	17,065	5000	208v/1ø, 5000W	BUILT IN THERMISTAT& CIRCUIT BREAKER

NOTES:
1. UNITS BASED ON MARKEL. (Q-MARK & ELECTROMODE MAY BE BID AS EQUAL).

PANEL G (MECH. ROOM 2200)

200 AMPS M.C.B. 120/208V-3ø-4W

CIR NO.	AMP/ POLES	DESCRIPTION	LOAD	LOAD	DESCRIPTION	AMP/ POLES	CIR NO.
1	20/1	F-201 (MECH 2100)	2292	2292	F-202 (MECH 2100)	20/1	2
3	20/1	F-203 (MECH 2100)	2292	1560	DOAS-200 (MECH 2100)	15/3	4
5	40/2	CU-201 (MECH 2100)	2984	1560			6
7			2984	1560			8
9	25/2	CU-202 (MECH 2100)	1632	2984	CU-203 (MECH 2100)	40/2	10
11			1632	2984			12
13	15/1	EF-1 (ROOF)	92	92	EF-2 (ROOF)	15/1	14
15	20/1	SPARE	---	---	SPARE	20/1	16
17	--	SPACE	---	---	SPACE	--	18
19	--	SPACE	---	---	SPACE	--	20
21	--	SPACE	---	---	SPACE	--	22
23	--	SPACE	---	---	SPACE	--	24
25	--	SPACE	---	---	SPACE	--	26
27	--	SPACE	---	---	SPACE	--	28
29	--	SPACE	---	---	SPACE	--	30
31	--	SPACE	---	---	SPACE	--	32
33	--	SPACE	---	---	SPACE	--	34
35	--	SPACE	---	---	SPACE	--	36
37	--	SPACE	---	---	SPACE	--	38
39	--	SPACE	---	---	SPACE	--	40
41	--	SPACE	---	---	SPACE	--	42

DENTAL SYMBOL LEGEND

ALL DEVICES SHALL BE INSTALLED PER STATE AND LOCAL CODE. ALL LOCATIONS SHOULD BE VERIFIED WITH PATTERSON REP OR OWNER PRIOR TO PLACEMENT.

+XX" - INDICATES HEIGHT FROM FINISHED FLOOR TO CENTER OF DEVICE UNLESS OTHERWISE NOTED BELOW, IF ITEM NOT TAGGED HEIGHT IS 18" A.F.F.

QTY.	SYM.	DESCRIPTION
4		120v DUPLEX DEDICATED OUTLET WALL, IF TAG NOT PRESENT HEIGHT IS 18" A.F.F. TO CENTER OF DEVICE
8		120v DUPLEX OUTLET WALL, IF TAG NOT PRESENT HEIGHT IS 18" A.F.F. TO CENTER OF DEVICE
10		120v QUAD OUTLET FLOOR, MOUNTED ON FLOOR
4		220v SINGLE OUTLET WALL, IF TAG NOT PRESENT HEIGHT IS 18" A.F.F. TO CENTER OF DEVICE
5		J-BOX FLOOR, IF TAG NOT PRESENT HEIGHT IS 1" A.F.F.
3		J-BOX WALL, IF TAG NOT PRESENT HEIGHT IS 18" A.F.F.

LOW VOLTAGE SYMBOLS

ALL DEVICES SHALL BE INSTALLED PER STATE AND LOCAL CODE. ALL LOCATIONS SHOULD BE VERIFIED WITH PATTERSON REP OR OWNER PRIOR TO PLACEMENT.

+XX" - INDICATES HEIGHT FROM FINISHED FLOOR TO CENTER OF DEVICE UNLESS OTHERWISE NOTED BELOW, IF ITEM NOT TAGGED HEIGHT IS 18" A.F.F.

QTY.	SYM.	DESCRIPTION
30		CONDUIT FLOOR STUB OUT, IF TAG NOT PRESENT HEIGHT IS 1" A.F.F.
1		DATA DEVICE WALL, IF TAG NOT PRESENT HEIGHT IS 18" A.F.F.
6		J-BOX WALL,LOW VOLTAGE, IF TAG NOT PRESENT HEIGHT IS 18" A.F.F
1		MASTER SWITCH WALL, IF TAG NOT PRESENT HEIGHT IS 60" A.F.F. TO CENTER
1		REMOTE PAN SWITCH IN WALL, IF TAG NOT PRESENT HEIGHT IS 60" A.F.F.
3		REMOTE X-RAY SWITCH WALL, IF TAG NOT PRESENT HEIGHT IS 60" A.F.F.

NOTE: SEE PATTERSON DENTAL DRAWINGS AND SPECIFICATIONS FOR MORE DETAILED ELECTRICAL WIRING AND CONNECTIONS.

ELECTRICAL SYMBOL LEGEND

SYMBOL	DESCRIPTION	NOTES
S	SINGLE POLE DECORA STYLE SWITCH	MOUNT @ 44" A.F.F. TO BOTTOM OF BOX, UNLESS OTHERWISE NOTED
S_3	THREE WAY DECORA STYLE SWITCH	MOUNT @ 44" A.F.F. TO BOTTOM OF BOX, UNLESS OTHERWISE NOTED
S_D	DIMMING SWITCH	MOUNT @ 44" A.F.F. TO BOTTOM OF BOX, UNLESS OTHERWISE NOTED SEE OCCUPANCY LEGEND
X	2'x2' FIXTURE, TYPE X	SEE LIGHTING FIXTURE SCHEDULE FOR TYPES
X	EMERGENCY LIGHTING FIXTURE	SEE LIGHTING FIXTURE SCHEDULE FOR TYPES
	LED WAREHOUSE LIGHT	SEE LIGHTING FIXTURE SCHEDULE FOR TYPES
X	1'x4' FIXTURE, TYPE X	SEE LIGHTING FIXTURE SCHEDULE FOR TYPES
X	EXIT SIGN, TYPE X	SEE LIGHTING FIXTURE SCHEDULE FOR TYPES
	DUPLEX OUTLET - 20 AMP	MOUNT @ 24" A.F.F. TO BOTTOM OF BOX, UNLESS OTHERWISE NOTED
	DUPLEX OUTLET - GROUND FAULT	MOUNT @ 24" A.F.F. TO BOTTOM OF BOX, UNLESS OTHERWISE NOTED
WP	DUPLEX OUTLET - WEATHER PROOF COVER	MOUNT @ 24" A.F.F. TO BOTTOM OF BOX, UNLESS OTHERWISE NOTED
	QUADPLEX OUTLET - 20 AMP	MOUNT @ 24" A.F.F. TO BOTTOM OF BOX, UNLESS OTHERWISE NOTED
	FLOOR BOX WITH DUPLEX OUTET	–
	DATA OUTLETS	MOUNT @ 24" A.F.F. TO BOTTOM OF BOX, UNLESS OTHERWISE NOTED, EC TO PROVIDE SINGLE GANG BOX WITH 1"C STUBBED ABOVE CEILING SPACE COORDINATE LOCATION, QUANTITY, AND HEIGHT W/ OWNER/TECH. CONSULTANT
	DATA/PHONE OUTLETS	MOUNT @ 24" A.F.F. TO BOTTOM OF BOX, UNLESS OTHERWISE NOTED, EC TO PROVIDE SINGLE GANG BOX WITH 1"C STUBBED ABOVE CEILING SPACE COORDINATE LOCATION, QUANTITY, AND HEIGHT W/ OWNER/TECH. CONSULTANT
X	NUMBER OF DATA DROPS	COORDINATE BOX SIZE TO ACCOMMODATE THE NUMBER OF DROPS.
	SPECIAL PURPOSE OUTLET, AS NOTED	REFER TO SHOP DRAWINGS FOR CONNECTION REQUIREMENTS
	MOTOR, AS SPECIFIED	REFERENCE SPECIFICATIONS FOR REQUIREMENTS
	FUSED DISCONNECT	REFER TO GENERAL ELECTRICAL NOTES AND ONE-LINE DIAGRAM. (VFD IS BEING SUPPLIED WITH UNIT FOR ROOTOPS OR BY CONT. CONTRACTOR)
	STARTER/DISCONNECT	REFERENCE SPECIFICATIONS FOR REQUIREMENTS
	FUSED DISCONNECT FOR VFD CONNECTION	PROVIDE ALL LINE VOLTAGE WIRING AND CONDUIT FOR VFD INSTALL.
	LIGHTING/BRANCH CIRCUIT PANELS	REFER TO GENERAL ELECTRICAL NOTES AND ONE-LINE DIAGRAM.
TV	CABLE TV BOX	PROVIDE CONDUIT AND BACKBOX ABOVE CEILING AS REQ'D.
T	MECHANICAL THERMOSTAT	PROVIDE CONDUIT AND BACKBOX

STATE OF MICHIGAN
JOHN JOSEPH RICHARDS
ENGINEER
NO. 43952
LICENSED PROFESSIONAL ENGINEER

PROJECT# 1801-02

Apollo Engineering LLC
12719 S. West Bayshore Dr.
sutite 10
Traverse City, MI 49684
(231) 932-0800 office

BRUCE DIETZ
100 N. RIPLEY
ALPENA, MI 49707

SHEET TITLE
SCHEDULES / NOTES / DETAILS - ELECTRICAL

PROJECT
ALCONA HEALTH CENTER
OSCODA SERVICES
NEW CLINIC

ISSUED
CODE SUB. JUNE 09, 2019

ENGINEER

DESIGNER
JEREMY ADAIR
(989) 733-5231

JOB NUMBER
1903.01

SHEET NO.
E5

PANEL C (MECH. ROOM 1210)

400 AMPS M.C.B. 120/208V-3ø-4W

CIR NO.	AMP/POLES	DESCRIPTION	LOAD	LOAD	DESCRIPTION	AMP/POLES	CIR NO.
1	20/1	F-101 (MECH 1210)	2292	2292	F-102 (MECH 1210)	20/1	2
3	25/2	HPFC-102B (MECH 1210)	2360	---	SPARE	20/1	4
5			2360	2292	F-103 (MECH 1210)	20/1	6
7	15/2	HP-1 (EXTERIOR)	1352	3360	CU-200 (EXTERIOR)	45/3	8
9			1352	3360			10
11	40/2	CU-101 (EXTERIOR)	2984	3360			12
13			2984	1632	CU-103 (MECH 1210)	25/2	14
15	25/2	CU-102 (EXTERIOR)	1632	1632			16
17			1632	1320	SP-1 (ELEV)	20/3	18
19	20/2	ELEVATOR (ELEVATOR)	250	1320			20
21			250	1320			22
23	20/1	SPARE	---	---	SPACE	--	24
25	--	SPACE	---	---	SPACE	--	26
27	--	SPACE	---	---	SPACE	--	28
29	--	SPACE	---	---	SPACE	--	30
31	--	SPACE	---	---	SPACE	--	32
33	--	SPACE	---	---	SPACE	--	34
35	--	SPACE	---	---	SPACE	--	36
37	--	SPACE	---	---	SPACE	--	38
39	--	SPACE	---	---	SPACE	--	40
41	--	SPACE	---	---	SPACE	--	42

PANEL D (MECH. RM. 2200)

200 AMPS M.C.B. 120/208V-3ø-4W

CIR NO.	AMP/POLES	DESCRIPTION	LOAD	LOAD	DESCRIPTION	AMP/POLES	CIR NO.
1	20/1	LIGHTS (2ND FLOOR)	785	853	LIGHTS (2ND FLOOR)	20/1	2
3	20/1	LIGHTS (2ND FLOOR)	690	900	RECEPTACLES (BH #1)	20/1	4
5	20/1	RECEPTACLES (BH #2)	900	900	RECEPTACLES (OFFICE #7)	20/1	6
7	20/1	RECEPTACLES (STAFF RESTROOM)	360	540	REFRIGERATOR (NW HALL)	20/1	8
9	20/1	RECEPTACLES (OFFICE #2)	900	900	RECEPTACLES (OFFICE #12)	20/1	10
11	20/1	RECEPTACLES (QUEST)	720	900	RECEPTACLES (MEETING)	20/1	12
13	20/1	RECEPTACLES (WAITING)	720	720	RECEPTACLES (LOBBY)	20/1	14
15	20/1	EWC-1 (LOBBY)	500	360	RECEPTACLES (PATIENT RR 1 & 2)	20/1	16
17	20/1	RECEPTACLES (EXAM #14)	720	720	RECEPTACLES (EXAM #15)	20/1	18
19	20/1	RECEPTACLES (COMFORT STAT.)	360	720	RECEPTACLES (EXAM #13)	20/1	20
21	20/1	RECEPTACLES (EXAM #12)	720	720	RECEPTACLES (	20/1	22
23	20/1	RECEPTACLES (EXAM #8)	720	720	RECEPTACLES (EXAM #9)	20/1	24
25	20/1	RECEPTACLES (RESTROOMS)	360	720	RECEPTACLES (EXAM #7)	20/1	26
27	20/1	RECEPTACLES (EXAM 2039)	720	720	RECEPTACLES (SERVER)	20/1	28
29	20/1	RECEPTACLES (SERVER)	360	360	RECEPTACLES (SERVER)	20/1	30
31	20/1	RECEPTACLES (SERVER)	360	720	RECEPTACLES (EXAM #10)	20/1	32
33	20/1	RECEPTACLES (EXAM)	720	---	SPARE	20/1	34
35	20/1	SPARE	---	---	SPACE	--	36
37	--	SPACE	---	---	SPACE	--	38
39	--	SPACE	---	---	SPACE	--	40
41	--	SPACE	---	---	SPACE	--	42
43	--	SPACE	---	---	SPACE	--	44
45	--	SPACE	---	---	SPACE	--	46
47	--	SPACE	---	---	SPACE	--	48
49	--	SPACE	---	---	SPACE	--	50
51	--	SPACE	---	---	SPACE	--	52
53	--	SPACE	---	---	SPACE	--	54

PANEL F (MECH. ROOM 2200)

200 AMPS M.C.B. 120/208V-3ø-4W

CIR NO.	AMP/POLES	DESCRIPTION	LOAD	LOAD	DESCRIPTION	AMP/POLES	CIR NO.
1	20/1	LIGHTS (2ND FLOOR)	925	795	LIGHTS (2ND FLOOR)	20/1	2
3	20/1	LIGHTS (2ND FLOOR)	656	720	RECEPTACLES (SITE MANAGER)	20/1	4
5	20/1	RECEPTACLES (PROVIDER OFFICE)	900	720	RECEPTACLES (STERILE)	20/1	6
7	20/1	RECEPTACLES (TREATMENT ROOM)	900	900	RECEPTACLES (PROVIDER OFFICE)	20/1	8
9	20/1	RECEPTACLES (EXAM #1)	720	720	RECEPTACLES (EXAM #2)	20/1	10
11	20/1	RECEPTACLES (CSS)	540	720	RECEPTACLES (CSS)	20/1	12
13	20/1	RECEPTACLES (CSS)	360	540	RECEPTACLES (COMFORT STATION)	20/1	14
15	20/1	REFRIGERATOR (MED'S)	780	720	RECEPTACLES (VITALS #1)	20/1	16
17	20/1	RECEPTACLES (NURSE STATION)	720	720	RECEPTACLES (NURSE STATION)	20/1	18
19	20/1	RECEPTACLES (NURSE STATION)	720	720	RECEPTACLES (NURSE STATION)	20/1	20
21	20/1	RECEPTACLES (PATIENT RR)	360	900	RECEPTACLES (CORR.)	20/1	22
23	20/1	RECEPTACLES (EXAM #11)	720	720	RECEPTACLES (EXAM #9)	20/1	24
25	20/1	RECEPTACLES (EXAM #8)	720	720	RECEPTACLES (VITALS #2)	20/1	26
27	20/1	RECEPTACLES (EXAM #5)	720	720	RECEPTACLES (EXAM #6)	20/1	28
29	20/1	RECEPTACLES (CORR.)	360	720	RECEPTACLES (MEETING RM.)	20/1	30
31	20/1	RECEPTACLES (MEETING RM.)	900	780	REFRIGERATOR (MEETING RM.)	20/1	32
33	20/1	REFRIGERATOR (MEETING RM.)	780	360	RECEPTACLES (MECH., JC)	20/1	34
35	20/1	SPARE	---	---	SPARE	20/1	36
37	--	SPACE	---	---	SPACE	--	38
39	--	SPACE	---	---	SPACE	--	40
41	--	SPACE	---	---	SPACE	--	42

PANEL A (MECH. ROOM 1210)

200 AMPS M.C.B. 120/208V-3ø-4W

CIR NO.	AMP/POLES	DESCRIPTION	LOAD	LOAD	DESCRIPTION	AMP/POLES	CIR NO.
1	20/1	LIGHTS (LOWER LEVEL)	1250	850	LIGHTS (LOWER LEVEL)	20/1	2
3	20/1	LIGHTS (LOWER LEVEL)	790	540	RECEPTACLES (TREAT. RM. #1 1033)	20/1	4
5	20/1	RECEPTACLES (WORK ROOM 1034)	900	720	RECEPTACLES (TREAT. RM. #2 1035)	20/1	6
7	20/1	RECEPTACLES (WORK ROOM 1034)	360	540	RECEPTACLES (RESTROOM 1092)	20/1	8
9	20/1	RECEPTACLES (T. RM. #3 1036)	720	360	RECEPTACLES (COM. CLOSET 1040)	20/1	10
11	20/1	RECEPTACLES (COM. CLOSET 1040)	360	360	RECEPTACLES (COM. CLOSET 1040)	20/1	12
13	20/1	RECEPTACLES (COM. CLOSET 1040)	360	540	RECEPTACLES (PT/OT SUITE 1030)	20/1	14
15	20/1	RECEPTACLES (PT/OT SUITE 1030)	720	1000	TREAD MILL (PT/OT SUITE 1030)	20/1	16
17	20/1	TREAD MILL (PT/OT SUITE 1030)	1000	1000	TREAD MILL (PT/OT SUITE 1030)	20/1	18
19	20/1	TREAD MILL (PT/OT SUITE 1030)	1000	900	RECEPTACLES (PT/OT SUITE 1030)	20/1	20
21	20/1	EWC-1 (PT/OT SUITE 1030)	500	540	RECEPTACLES (LEAD OFF. 1012)	20/1	22
23	20/1	RECEPTACLES (PT/OT WAIT. 1010)	1080	720	RECEPTACLES (PT/OT OFFICE 1011)	20/1	24
25	20/1	RECEPTACLES (PT/OT BUSS. OFF 1011)	900	360	RECEPTACLES (PT/OT HALL)	20/1	26
27	20/1	RECEPTCLES (BONE DENSITY 1022)	720	900	RECEPTACLES (PT/OT SUPPLY 1021)	20/1	28
29	20/1	RECEPTACLES (PT. RR. 1013,1017)	360	720	RECEPTACLES (ULTRASOUND 1016)	20/1	30
31	20/1	RECEPTACLES (LOBBY 1002)	900	360	RECEPTACLES (STAIR #1 1003)	20/1	32
33	20/1	EWC-1 (LOBBY 1002)	500	360	RECEPTACLES (PT. RR. 1004, 1005)	20/1	34
35	20/3	RECEPTACLES (TREATMENT #4 1032)	540	360	RECEPTACLES (STAFF RR. 1091, 1092)	20/1	36
37	20/1	RECEPTACLES (STAFF CORR. 1090)	900	900	RECEPTACLES (MEETING 1100)	20/1	38
39	20/1	REFRIGERATOR (MEETING 1100)	780	780	REFRIGERATOR (MEETING 1100)	20/1	40
41	20/1	RECEPTACLES (MEETING 1100)	540	540	RECEPTACLES (MEETING 1100)	20/1	42
43	20/1	RECEPTACLES (MAMMOGRAPHY 1120)	720	1000	MAMM. MACHINE (MAMMOGRAPHY 1120)	20/2	44
45	20/1	RECEPTACLES (X-RAY TECH 1019)	360	1000			46
47	20/2	X-RAY (X-RAY 1018)	2200	500	AM GENERATOR (X-RAY 1018)	20/1	48
49			2200	120	LIGHTS (EXTERIOR)	20/1	50
51	20/1	RECEPTACLES (PT/OT SUITE 1030)	540	360	RECEPTACLES (PT/OT SUITE 1030)	20/1	52
53	20/1	RECEPTACLES (PT/OT ICE 1023)	180	1000	AUTO DOORS (ENTRY 1001)	20/1	54
55	20/1	AUTO DOORS (LOBBY 1002)	1000	500	AUTO DOORS (CORRIDORS)	20/1	56
57	20/1	SPARE	---	---	SPARE	20/1	58
59	--	SPACE	---	---	SPACE	--	60
61	--	SPACE	---	---	SPACE	--	62
63	--	SPACE	---	---	SPACE	--	64
65	--	SPACE	---	---	SPACE	--	66
67	--	SPACE	---	---	SPACE	--	68
69	--	SPACE	---	---	SPACE	--	70
71	--	SPACE	---	---	SPACE	--	72

PANEL B (MECH. ROOM 1210)

200 AMPS M.C.B. 120/208V-3ø-4W

CIR NO.	AMP/POLES	DESCRIPTION	LOAD	LOAD	DESCRIPTION	AMP/POLES	CIR NO.
1	20/1	LIGHTS (DENTAL SUITE)	780	1250	LIGHTS (DENTAL SUITE)	20/1	2
3	20/1	LIGHTS (DENTAL SUITE)	1100	540	RECEPTACLES (DENTAL WAITING 1050)	20/1	4
5	20/1	RECEPTACLES (DENTAL CORR.)	540	900	RECEPTACLES (DENTAL BUS. OFF. 1051)	20/1	6
7	20/1	RECEPTACLES (DENT. BUS. OFF. 1051)	720	360	RECEPTACLES (DENTAL BUS. OFF. 1051)	20/1	8
9	20/1	RECEPTACLES (MANAGER OFF. 1054)	900	720	RECEPTACLES (DENTAL OFFICE 1055)	20/1	10
11	20/1	DENTAL CHAIR (DENTAL EXAM #1 1065)	840	1920	X-RAY (DENTAL EXAM #1 1065)	20/1	12
13	20/1	RECEPTACLES (DENTAL EXAM #1 1065)	900	360	RECEPTACLES (DENTAL EXAM #1 1065)	20/1	14
15	20/1	RECEPTACLES (DENTAL OPP. #4 1064)	360	360	RECEPTACLES (DENTAL OPP. #4 1064)	20/1	16
17	20/1	DENTAL CHAIR (DENTAL OPP. #4 1064)	840	720	RECEPTACLES (DENTAL OPP. #4 1064)	20/1	18
19	20/1	X-RAY (DENTAL OPP. #4 1064)	1920	360	RECEPTACLES (DENTAL OPP. #3 1063)	20/1	20
21	20/1	DENTAL CHAIR (DENTAL OPP. #3 1063)	840	720	RECEPTACLES (DENTAL OPP. #3 1063)	20/1	22
23	20/1	RECEPTACLES (DENTAL OPP. #3 1063)	720	360	RECEPTACLES (DENTAL OPP. #2 1062)	20/1	24
25	20/1	DENTAL CHAIR (DENTAL OPP. #2 1062)	840	720	RECEPTACLES (DENTAL OPP. #2 1062)	20/1	26
27	20/1	RECEPTACLES (DENTAL OPP. #2 1062)	720	1920	X-RAY (DENTAL OPP. #2 1062)	20/1	28
29	20/1	RECEPTACLES (DENTAL OPP. #1 1061)	360	840	DENTAL CHAIR (DENTAL OPP. #1 1061)	20/1	30
31	20/1	RECEPTACLES (DENTAL OPP. #1 1061)	720	720	RECEPTACLES (DENTAL OPP. #1 1061)	20/1	32
33	20/1	RECEPTACLES (PROVIDER OFFICE 1085)	720	360	RECEPTACLES (DENTAL DATA 1081)	20/1	34
35	20/1	RECEPTACLES (DENTAL DATA 1081)	360	360	RECEPTACLES (DENTAL DATA 1081)	20/1	36
37	30/2	VPC (DENTAL EQUP. 1082)	2496	2498	VAC (DENTAL EQUIP. 1082)	30/2	38
39			2496	2498			40
41	50/2	COMPRESSOR (DENTAL EQUP. 1082)	1664	720	RECEPTACLES (DENTAL GAS 1083)	20/1	42
43			1664	900	RECEPTACLES (SCHOOL COORD. 1084))	20/1	44
45	20/1	RECEPTACLES (LAB 1069)	540	540	RECEPTACLES (LAB 1069)	20/1	46
47	40/2	WASHER/DRYER (LAUNDRY 1071)	2500	360	RECEPTACLES (BIOHAZARD 1070)	20/1	48
49			2500	360	RECEPTACLES (STERILIZATION 1068)	20/1	50
51	20/1	STERILIZER (STERILIZATION 1068)	540	1440	STERILIZER (STERILIZATION 1068)	20/1	52
53	20/1	RECEPTACLES (STERILIZATION 1068)	180	720	RECEPTACLES (D. OFFICE 1067)	20/1	54
55	20/1	RECEPTACLES (DENTAL OFFICE 1067)	720	720	RECEPTACLES (D. OFFICE 1067)	20/1	56
57	30/2	PAN X-RAY (PAN X-RAY 1066)	1664	360	RECEPTACLES (PT/OT WAITING 1010)	20/1	58
59			1664	250	CE TRANSFORMER (DENTAL EQUIP 1082)	20/1	60
61	20/1	RECEPTACLE/BLOWER FAN (LAUNDRY 1071)	---	---	SPARE	20/1	62
63	20/1	SPARE	---	---	SPACE	--	64
65	--	SPACE	---	---	SPACE	--	66
67	--	SPACE	---	---	SPACE	--	68
69	--	SPACE	---	---	SPACE	--	70
71	--	SPACE	---	---	SPACE	--	72

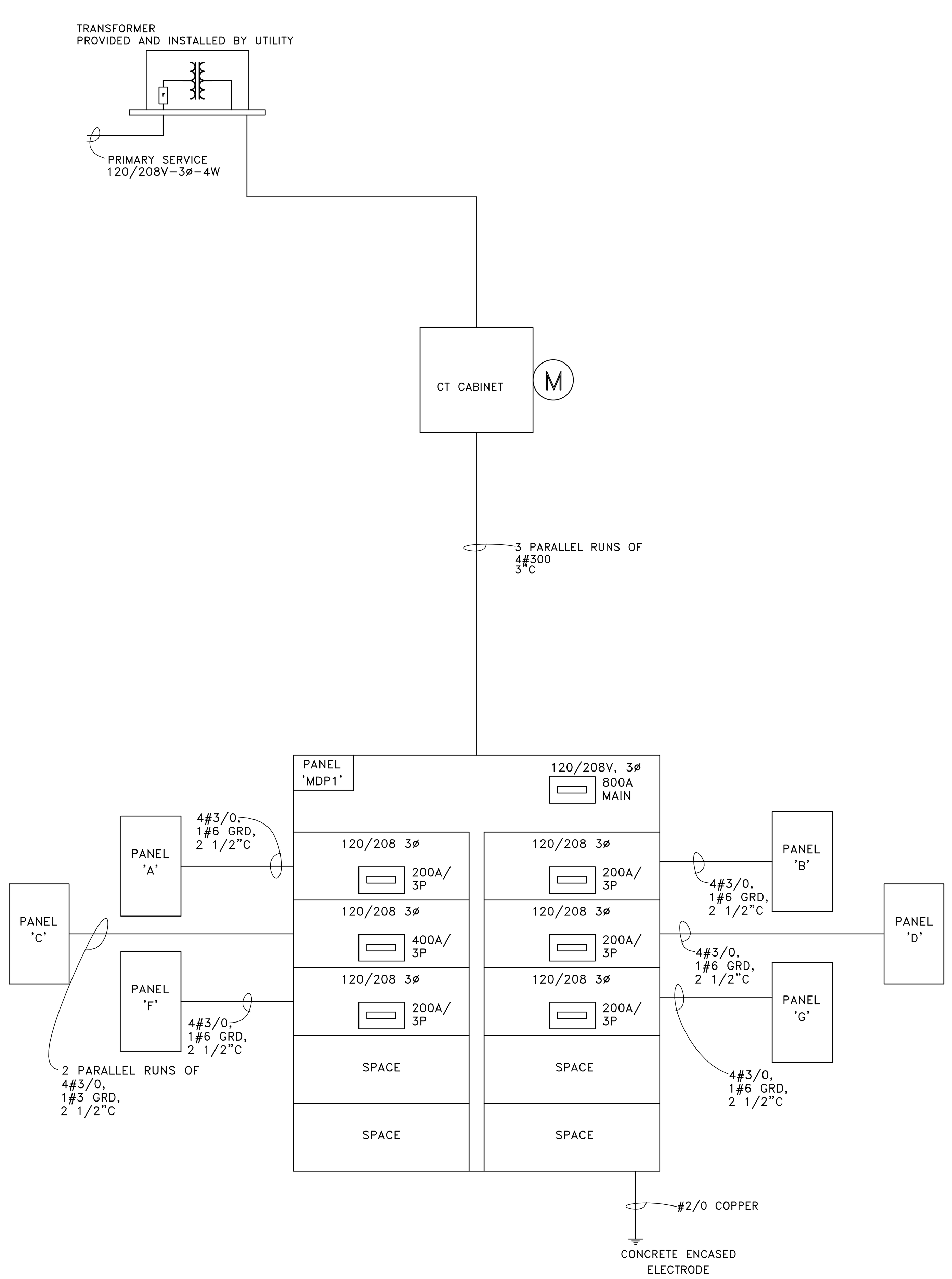

PANEL A - 120/208V, 3ø

LIGHTS - (7,148 SQFT) (2VA) = 14,296VA
RECEPTACLES - (114REC)(180/REC) = 20,520VA = 10,000VA
- 10,000VA
= 5,260VA
X-RAY - (1)(2000VA) = 2,000VA
TREAD MILLS - (4)(1000VA) = 4,000VA
REFRIGERATORS - (2)(780VA) = 1,560VA
= 37,116VA
37.1 KW - 103.1A

PANEL B - 120/208V, 3ø

LIGHTS - (3,113 SQFT) (2VA) = 6,226VA
RECEPTACLES - (122REC)(180/REC) = 21,960VA = 10,000VA
- 10,000VA
11,960VA(.50) = 5,980VA
WASHER/DRYER - (1)(5,000VA) = 5,000VA
PAN X-RAY - (1)(3,328VA) = 3,328VA
VAC - (1)(4,996VA) = 4,996VA
COMPRESSOR - (1)(3,328VA) = 3,328VA
VPC - (1)(4,992VA) = 4,992VA
DENTAL X-RAY'S - (3)(1,920VA) = 5,700VA
DENTAL CHAIRS - (5)(840VA) = 4,200VA
= 53,750VA
53.8 KW - 149.3A

PANEL C - 120/208V, 3ø

F-101&103 - (2)(2,292) = 4,584VA
HPFC-101A - (1)(11,190) = 11,190VA
HPFC-101B - (1)(4,720) = 4,720VA
CU-100 - (1)(10,080) = 10,080VA
CU-101&103 - (2)(4,804) = 9,608VA
HP-102 - (1)(6,760) = 6,760VA
HP-1 - (1)(2,704) = 2,704VA
= 49,646VA
49.7 KW - 137.9A

PANEL D - 120/208V, 3ø

LIGHTS - (6,218 SQFT) (2VA) = 12,436VA
RECEPTACLES - (112REC)(180/REC) = 20,160VA = 10,000VA
- 10,000VA
10,160VA(.50) = 5,080VA
EWC-1 = 500VA
= 28,016VA
28.0 KW - 77.8A

PANEL F - 120/208V, 3ø

LIGHTS - (6,021 SQFT) (2VA) = 12,042VA
RECEPTACLES - (110REC)(180/REC) = 19,800VA = 10,000VA
- 10,000VA
9,800VA(.50) = 4,900VA
REFRIGERATOR - (3)(780VA) = 2,340VA
= 29,282VA
29.3 KW - 81.3A

PANEL G - 120/208V, 3ø

F-201,202,203 - (3)(2,292) = 6,876VA
DOAS-200 - (1)(4,680) = 4,680VA
CU-201 - (1)(4,804) = 4,804VA
CU-202 - (1)(3,264) = 3,264VA
CU-203 - (1)(5,968)+(5,968)(.25) = 7,460VA
= 27,084VA
27.1 KW - 75.2A

MDP1 - 120/208V, 3ø

LIGHTS - (19,824 SQFT) (2VA) = 39,648VA
RECEPTACLES - (458 REC)(180/REC) = 82,440VA = 10,000VA
- 10,000VA
72,440VA(.50) = 36,220VA
REFRIGERATORS - (5)(780) = 3,900VA
EWC-1 - (2)(500) = 1,000VA
F-101,103,201,202,203 - (5)(2,292) = 11,460VA
HPFC-101A - (1)(11,190) = 11,190VA
HPFC-101B - (1)(4,720) = 4,720VA
CU-100 - (1)(10,080)+(10,080)(.25) = 12,600VA
CU-101,103,201 - (3)(4,804) = 14,412VA
HP-102 - (1)(6,760) = 6,760VA
HP-1 - (1)(2,704) = 2,704VA
DOAS-200 - (1)(4,680) = 4,680VA
CU-202 - (1)(3,264) = 3,264VA
CU-203 - (1)(5,968) = 5,968VA
WASHER/DRYER - (1)(5,000VA) = 5,000VA
PAN X-RAY - (1)(3,328VA) = 3,328VA
- (1)(4,996VA) = 4,996VA
COMPRESSOR - (1)(3,328VA) = 3,328VA
- (1)(4,992VA) = 4,992VA
DENTAL X-RAY'S - (3)(1,920VA) = 5,700VA
DENTAL CHAIRS - (5)(840VA) = 4,200VA
=191,746VA
191.7 KW - 532.6A

ONE-LINE DIAGRAM

NOT TO SCALE

STATE OF MICHIGAN
JOHN JOSEPH RICHARDS
ENGINEER
NO. 43952
LICENSED PROFESSIONAL ENGINEER

PROJECT# 1801-02

Apollo Engineering LLC
12719 S. West Bayshore Dr.
suite 10
Traverse City, MI 49684
(231) 932-0800 office

BRUCE DIETZ
100 N. RIPLEY
ALPENA, MI 49707

SHEET TITLE
SCHEDULES / ONE-LINE DIAGRAM - ELECTRICAL

PROJECT
ALCONA HEALTH CENTER
OSCODA SERVICES
NEW CLINIC

ISSUED
CODE SUB. JUNE 09, 2019

ENGINEER

DESIGNER
JEREMY ADAIR
(989) 733-5231

JOB NUMBER
1903.01

SHEET NO.
E6